Hydronic* M-II (Water Heater)

Espar Heater Systems

Technical Description
Installation Instructions
Operating Instructions
Maintenance Instructions
Troubleshooting and Repair Instructions
Parts List

Espar Products, Inc.
(800) 387-4800
(905) 670-0960
www.espar.com

HYDRONIC* M8 *Biodiesel	***HYDRONIC* M10**	***HYDRONIC* M12**
25 2470 05 - 12 Volt	25 2434 05 - 12 Volt	25 2472 05 - 12 Volt
25 2471 05 - 24 Volt	25 2435 05 - 24 Volt	25 2473 05 - 24 Volt

P/N 20 2900 81 0102 0A 04.2009 Subject to Change Printed in Canada

Table of Contents

Page

Introduction	Heater Warnings	3
	Technical Data Hydronic M8 Biodiesel	4
	Technical Data Hydronic M10	5
	Technical Data Hydronic M12	6
	Heater Components	7
	Principal Dimensions	8
Installation Procedures	Heater Location / Mounting/ Fastening	9
	Heater & Engine Plumbing	10
	Fuel Quality	11
	Fuel System	12
	Electrical Connections	14
	Exhaust / Intake Connections	15
	Operating Switches: 7 Day Timer	16
	Push/Pull Switch, Programmable Timer	18
Heater Operation	Pre-Start Procedures / Start-Up	20
	Heating Mode / Termperature Drop	20
	Switching Off /Safety Equipment	20
	Heater Wiring	21
	Parts List for Wiring Diagram	22
	Heater Wiring Diagram	23
	Controler wireing diagrams	24
Maintenance, Troubleshooting & Repairs	Periodic Maintenance	25
	Basic Troubleshooting / Self Diagnostics	25
	Fault codes / Description / Repair	26
	Repair Instructions	30
	Repair Steps	31
	Fuel Quantity	47
Heater Components	Parts Diagram	48
	Description & Part #'s	49
	Parts Diagram - Boxed units	50
	Description & Part #'s	51

Special Notes

Note: Highlight areas requiring special attention or clarification.

Caution: *Indicates that personal injury or damage to equipment may occur unless specific guidelines are followed.*

Warning: Indicates that serious or fatal injury may result if specific guidelines are not followed.

This publication was correct at the time of going to print. However, Espar Inc. has a policy of continuous improvement and reserves the right to amend any specifications without prior notice.

Heater Warnings

Warning To Installer

- Correct installation of this heater is necessary to ensure safe and proper operation.
  Read and understand this manual before attempting to install the heater. Failure to follow all these instructions could cause serious or fatal injury.

Warning - Explosion Hazard

- Heater must be turned off while re-fueling.
- Do not install heater in enclosed areas where combustible fumes may be present.
- Do not install heaters in engine compartments of marine vessals**.**

Warning - Fire Hazard

- Install the exhaust system so it will maintain a minimum distance of 50mm (2”) from any flammable or heat sensitive material.
- Ensure that the fuel system is intact and there are no leaks.

Warning - Asphyxiation Hazard

- Route the heater exhaust so that exhaust fumes cannot enter any passenger compartments.
- If running exhaust components through an enclosed compartment, ensure that it is vented to the outside.

Warning - Safety Hazard on Coolant Heaters Used With Improper Antifreeze Mixtures

- The use of Espar coolant heaters requires that the coolant in the system to be heated contains a proper mixture of water and antifreeze to prevent coolant from freezing or slushing.
- If the coolant becomes slushy or frozen, the heater’s coolant pump cannot move the coolant causing a blockage of the circulating system. Once this occurs, pressure will build up rapidly in the heater and the coolant hose will either burst or blow off at the connection point to the heater.
- This situation could cause engine damage and/or personal injury. Extreme care should be taken to ensure a proper mixture of water and antifreeze is used in the coolant system.
- Refer to the engine manufacturer’s or coolant manufacturer’s recommendations for your specific requirements.

Please note!

Installation of the heater is permitted in vehicles used for the transport of dangerous goods as per ADR.

Caution:

During electrical welding work on the vehicle disconnect the power to the heater in order to protect the control unit.

Note: All measurements contained in this manual contain metric and approximate SAE equivalents in brackets eg 25mm (1”).

Safety instructions for application and proper purpose

The heater must only be used and operated for the range of application stated by the manufacturer in compliance with the “Operating instructions” included with every heater.

Direct questions to Espar Heater Systems:

Canada & U.S.A. **1-800-387-4800**

This publication was correct at the time of print. However, Espar has a policy of continuous improvement and reserves the right to amend any specifications without prior notice.

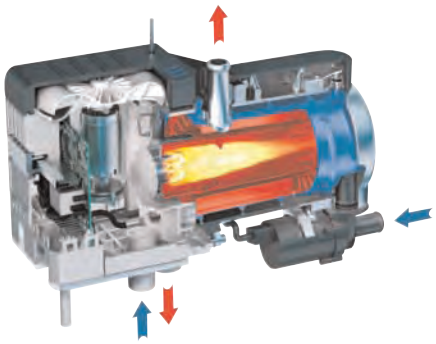

Technical data

Heater type		***HYDRONIC* M-II**			
Heater		*HYDRONIC* M8 Biodiesel			
Version		D 8 W			
Heating medium		Water, Cooling fluid			
Control of the heat flow		Power	High	Medium	Low
Heat flow (BTU) (Watt) Figures for operation with diesel fuel. If operated with Biodiesel the heat flow can reduce by up to 15 %.		BTU 27297 Watt 8000	17061 5000	11943 3500	5118 1500
Fuel consumption (g/h) (l/h)		g/h 0.24 l/h 0.90	0.17 0.65	0.11 0.40	0.05 0.18
Electrical power (Watt)	in operation	55	46	39	35
	at start – after 25 Sec.	200			
	in the control phase “OFF”	32			
Rated voltage		12 Volt		24 Volt	
Operating range • Lower voltage limit: An undervoltage protection in the controller switches the heater off on reaching the voltage limit.		10 Volt		20 Volt	
• Upper voltage limit: An overvoltage protection in the controller switches the heater off on reaching the voltage limit.		15 Volt		30 Volt	
Tolerable operating pressure		up to 200 kPa - 30 psi			
Flow rate of the water pump at 2 psi		1400 l/h 370 g/h			
Minimum water flow rate of the heater		500 l/h 132 g/h			
Tolerable operating temperature		Operation		Not running	
Heater / Control box	Diesel	– 40 °F to +176 °F / –40 °C to +80 °C		–40 °F to +185 °F / –40 °C to +85 °C	
	Biodiesel	+17.6 °F to +176 °F / –8 °C to +80 °C		–40 °F to +185 °F / –40 °C to +85 °C	
Dosing pump	Diesel	– 40 °F to +122 °F / –40 °C to +50 °C		–40 °F to +185 °F / –40 °C to +85 °C	
	Biodiesel	+17.6 °F to +122 °F / –8 °C to +50 °C		–40 °F to +185 °F / –40 °C to +85 °C	
Weight with controller and water pump, without dosing pump		approx. 6.2 kg - 13.7 lb			

Caution:

Failure to comply with the technical data can result in malfunctions.

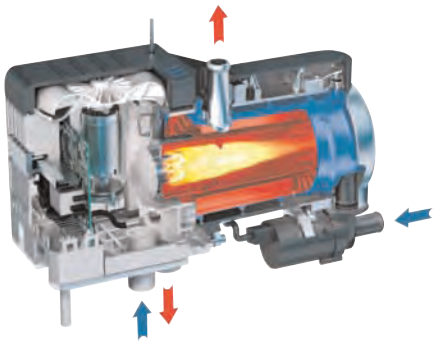

Technical data

Heater type		***HYDRONIC* M-II**			
Heater		*HYDRONIC* M10			
Version		D 10 W			
Heating medium		Water, Cooling fluid			
Control of the heat flow		Power	High	Medium	Low
Heat flow	BTU	32415	27297	11943	5118
	Watt	9500	8000	3500	1500
Fuel consumption	(g/h)	0.32	0.24	0.11	0.05
	(l/h)	1.2	0.9	0.4	0.18
Electrical power (Watt)	in operation	86	60	39	35
	at start – after 25 Sec.	120			
	in the control phase “OFF”	32			
Rated voltage		12 Volt		24 Volt	
Operating range • Lower voltage limit: An undervoltage protection in the controller switches the heater off on reaching the voltage limit.		10 Volt		20 Volt	
• Upper voltage limit: An overvoltage protection in the controller switches the heater off on reaching the voltage limit.		15 Volt		30 Volt	
Tolerable operating pressure		up to 200 kPa - 30 psi			
Flow rate of the water pump at 2 psi		1400 l/h - 370 g/h			
Minimum water flow rate of the heater		500 l/h - 132 g/h			
Tolerable operating temperature		Operation		Not running	
	Heater / Control box	–40 °F to +176 °F / –40 °C to +80 °C		–40 °F to +185 °F / –40 °C to +85 °C	
	Dosing pump	–40 °F to +122 °F / –40 °C to +50 °C		–40 °F to +185 °F / –40 °C to +85 °C	
Weight with controller and water pump, without dosing pump		approx. 6.2 g/h - 13.7 lb			

Caution:

Failure to comply with the technical data can result in malfunctions.

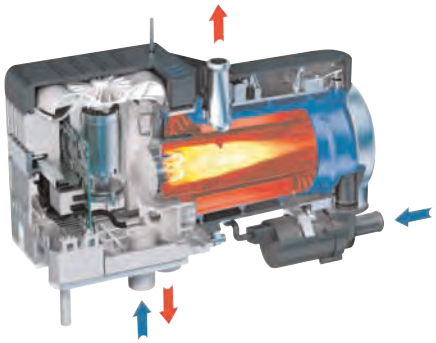

Technical data

Heater type		***HYDRONIC* M-II**					
Heater		*HYDRONIC* M12					
Version		D 12 W					
Heating medium		Water, Cooling fluid					
Control of the heat flow		Power	High	Medium 1	Medium 2	Medium 3	Low
Heat flow	BTU	42000	32415	17061	11943	5118	4095
Fuel consumption	(g/h)	.40	.32	.17	.11	.05	.04
	(l/h)	1.5	1.2	0.65	0.40	0.18	0.15
Electrical power (Watt)	in operation	132	86	46	39	35	34
	at start – after 25 Sec.	120					
	in the control phase “OFF”	32					
Rated voltage		12 Volt			24 Volt		
Operating range • Lower voltage limit: An undervoltage protection in the controller switches the heater off on reaching the voltage limit.		10 Volt			20 Volt		
• Upper voltage limit: An overvoltage protection in the controller switches the heater off on reaching the voltage limit.		15 Volt			30 Volt		
Tolerable operating pressure		up to 200 kPa - 30 psi					
Flow rate of the water pump at 2 psi		1400 l/h - 370 g/h					
Minimum water flow rate of the heater		500 l/h - 132 g/h					
Tolerable operating temperature		Operation			Not running		
	Heater / Control box	–40 °F to +176 °F / –40 °C to +80 °C			–40 °F to +185 °F / –40 °C to +85 °C		
	Dosing pump	–40 °F to +122 °F / –40 °C to +50 °C			–40 °F to +185 °F / –40 °C to +85 °C		
Weight with controller and water pump, without dosing pump		approx. 6.2 g/h - 13.7 lb.					

Caution:

Failure to comply with the technical data can result in malfunctions.

Heater Components

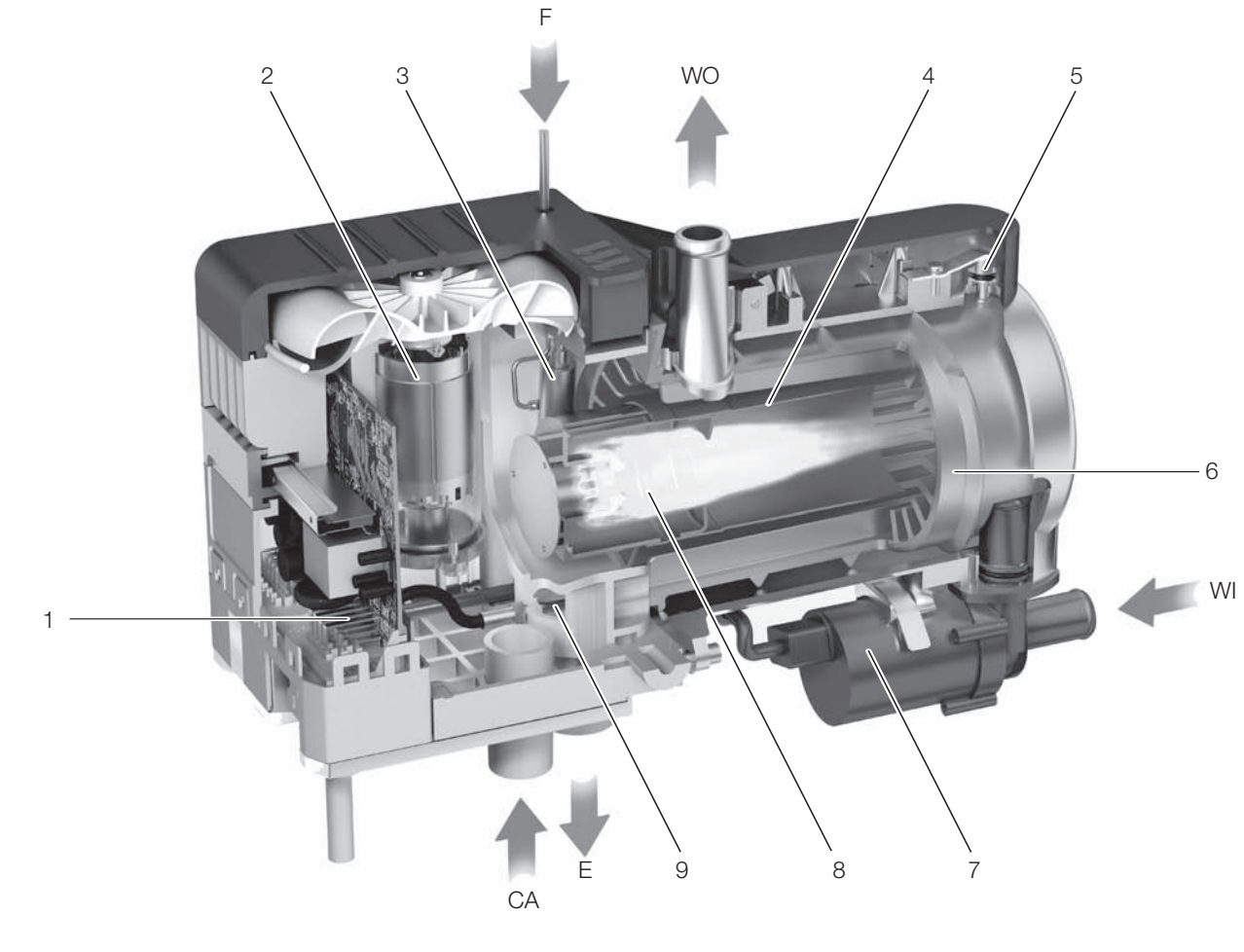

WI	**=**	**Water inlet**
WO	**=**	**Water outlet**
CA	**=**	**Combustion air**
F	**=**	**Fuel**
E	**=**	**Exhaust**

1 Control box
2 Burner motor
3 Glow plug
4 Flame pipe
5 Overheating sensor
6 Heat exchanger
7 Water pump
8 Combustion chamber
9 Flame sensor

Principal Dimensions

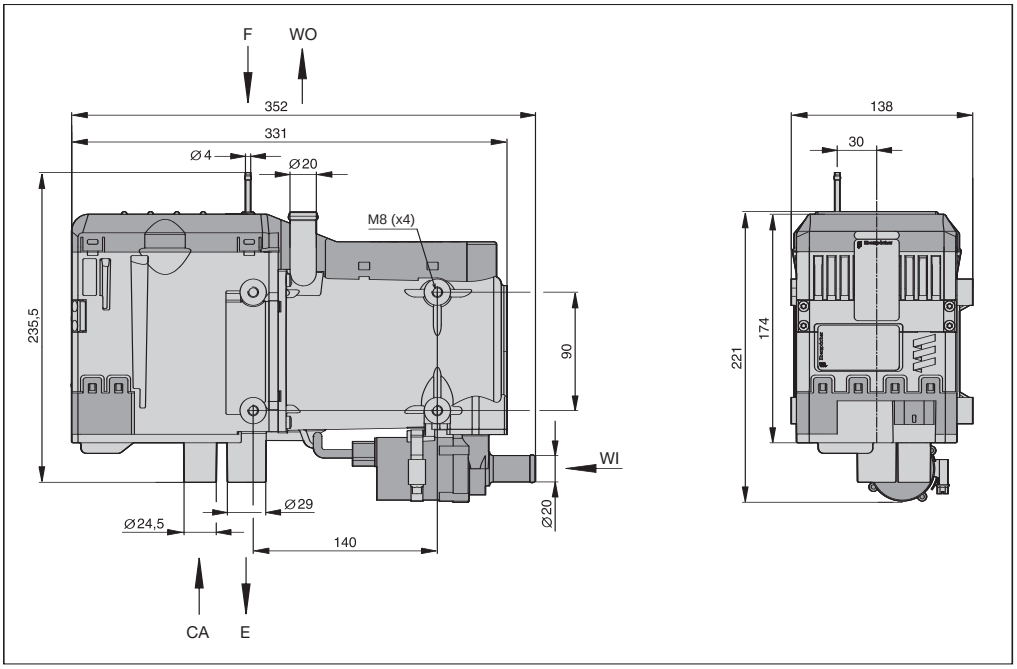

E Exhaust
F Fuel
CA Combustion air
WO Water outlet
WI Water inlet

* All measurements in millimeters 25.4 mm = 1”

Boxed Heaters Insure:
Minimum installation distance (clearance) to open the lid and to dismount the glow pin and the control unit.

Insure:
Minimum installation distance (clearance) to take in combustion air.

Permissible installation positions

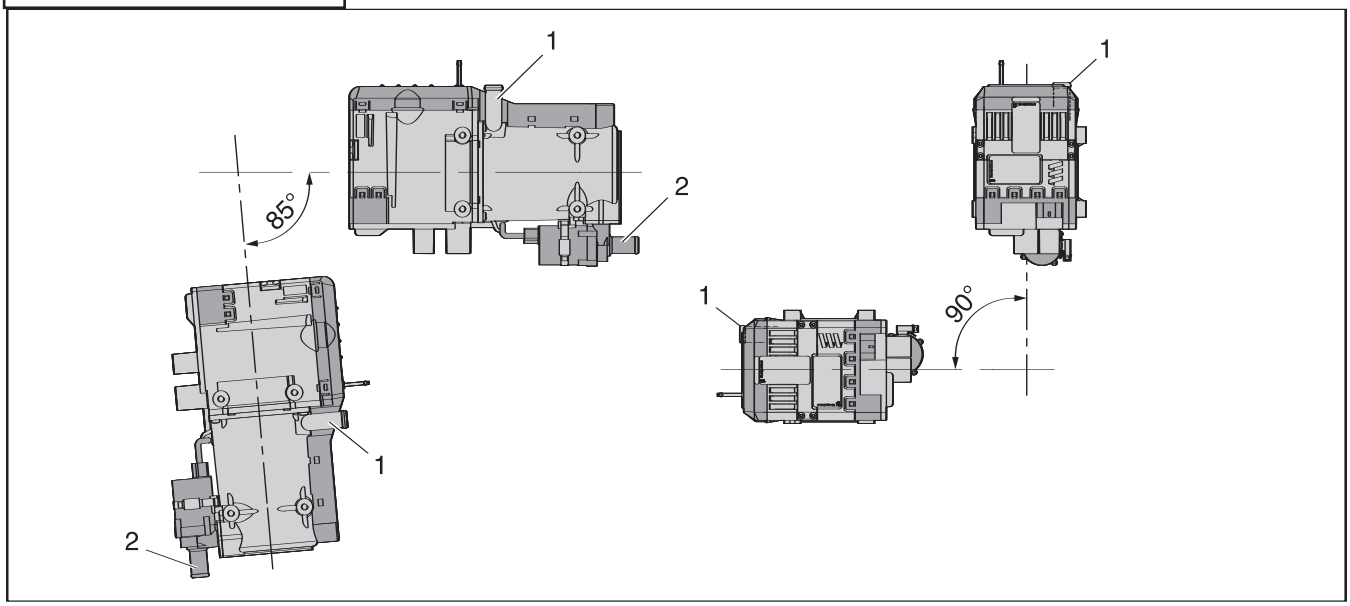

1 Water outlet socket, heater
2 Water inlet socket, water pump

Principal Dimensions - Boxed Version

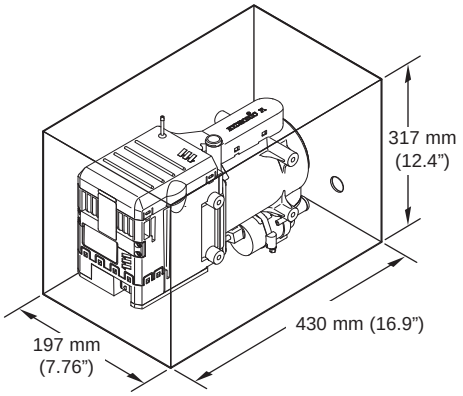

Heater Location

Always mount the heater in a protected area. Eg: storage compartment, engine compartments, step box or battery box. Espar recommends you use the boxed unit. Refer to fig. 1

When mounting the heater adhere to the following conditions:

- Situate the heater below the normal coolant level of the engine.
- Guard against excessive road spray.
- Keep coolant hoses, fuel lines and electrical wiring as short as possible.

Heater Mounting

Mount the heater using the four (4) shock mounts provided with kit and one of the following mounting methods:

- Use the **Side Mount Bracket** to mount the heater on the side of the frame rail.
- Use a spare step box or battery box.
- Use the saddle bracket and hardware provided

Caution: *Guard the heater against excessive road spray to avoid internal corrosion.*

Mounting and Fastening

Fix the unit holder from the installation kit to the heater using 4 hexagon screws M8 and 4 spring washers.

Fix the heater and the mounted unit holder in a suitable place in the vehicle using 5 hexagon screws M8, 5 spring washers and 5 hexagon nuts M8

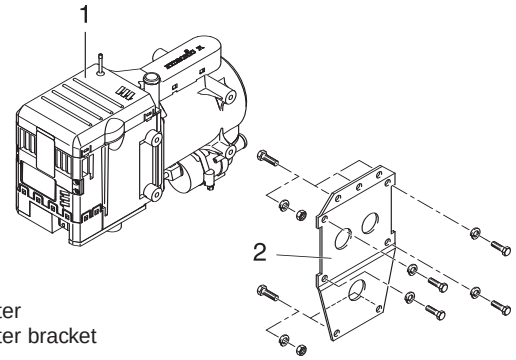

1 Heater
2 Heater bracket

Arrangement of the heater

Parts of the structure and other components near the heater must be protected from excess heat exposure and possible contamination from fuel or oil.

The heater must not pose a fire hazard even when it overheats.

– This requirement is deemed to be fulfilled when adequate clearance to all parts is observed during installation, sufficient ventilation is provided and fireproof materials or heat plates are used.

The heater must not be located in the passenger compartment. A unit may however be used in a hermetically sealed housing which also corresponds to the conditions stated above.

The factory nameplate or duplicate must be affixed so that it can still be easily read when the heater is installed in the vehicle.

All appropriate precautions must be taken when arranging the heater to minimise the risk of injuries to persons or damage to other property.

Fig. 1

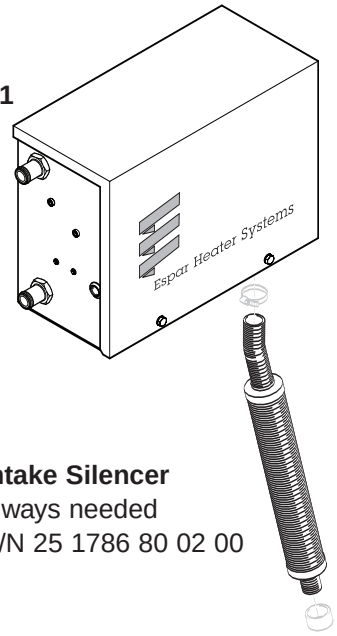

Box Base
P/N 25 2800 40 10 02
Box Lid
P/N 25 2800 40 10 03

Intake Silencer
always needed
P/N 25 1786 80 02 00

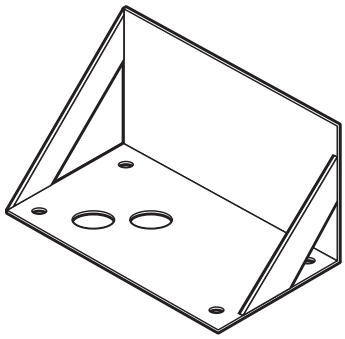

Side Mount Bracket
P/N 20 2900 40 00 75

Heater Plumbing

The heater is incorporated into the engine's cooling system for engine preheating.

Engine Plumbing

Follow these guidelines and refer to the engine plumbing diagram shown below.

- Install hose fittings into the engine block for pick-up and return lines.
- Use existing holes in the engine block (ie. remove blanking plugs when possible).
- Use shut off valves to ensure the system can be isolated from the engine when not in use. Alternatively "T" piece connectors in existing coolant hoses can be used if no blanking plugs are available.
- Provide 20mm (3/4") hose barbs for hose connections.
- Use 20mm (3/4") hoses to ensure adequate coolant flow.
- Keep the pick up and return points as far apart as possible to ensure good heat distribution.

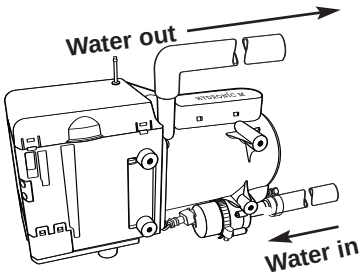

- Take the coolant from a low point on the engine to reduce aeration in the system.
- Ensure proper direction of coolant flow by taking coolant from a high pressure point in the engine and returning it to a low pressure point. (ie. pickup from back of block and return to the suction side of the engine's water pump).
- Ensure adequate flow rate through the heater by comparing the incoming and outgoing coolant temperatures while the heater is running. If the rise in temperature exceeds 10°C (18°F), coolant flow must be increased by modifying the plumbing.
- Ensure the heater and water pump are installed as low as pos sible to allow the purging of air.
- If a bunk heat exchanger is incorporated into the system, proper plumbing layouts must be followed.

Caution: *It is possible for the coolant and components of the coolant circuit to get very hot.*

- *Parts conveying water must be routed and fastened in such a way that they pose no temperature risk to man, animals or material sensitive to temperature from radiation / direct contact.*
- *Before working on the coolant circuit, switch the heater off and wait until all components have cooled down completely, if necessary where safety gloves.*

Caution:

- *When installing the heater, please take note of the direction of flow of the coolant circuit.*
- *Fill the heater and water hoses with coolant before connecting to the coolant circuit.*
- *Route the water hoses without any kinks, and in a rising position if possible.*
- *When routing the water pipes, observe a sufficient clearance to hot vehicle parts.*
- *Protect all water hoses / water pipes from chafing and from extreme temperatures.*
- *Secure all hose connections with hose clips.*
- *After the vehicle has been operating for 2 hours or travelled 100 km, tighten the hose clips again.*
- *The minimum water flow rate is only guaranteed if the tem perature difference of the heating medium does not exceed 15°C* (60°C) *between water inlet and water outlet during heating.*
- *Only overpressure valves with an opening pressure of min. 6 psi – max. 30 psi bar may be used in the coolant circuit.*
- *The coolant liquid must contain at least 10 % antifreeze all year round as corrosion protection.*
- *The cooling liquid must contain sufficient antifreeze for low temperatures.*
- *Before commissioning the heater or after changing the cooling liquid, the whole coolant circuit including heater must be vented free of bubbles according to the instructions issued by the vehicle manufacturer.*
- *Only top up with coolant approved by the vehicle manufacturer.*

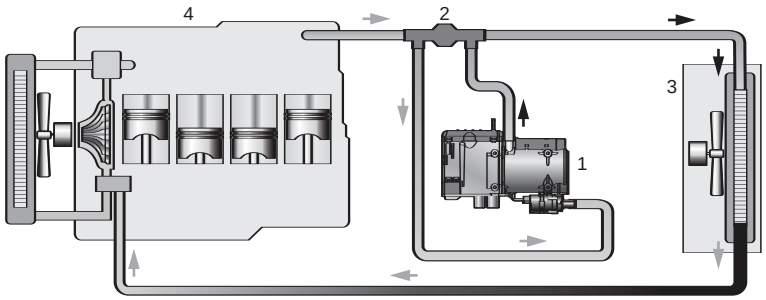

1 Heater
2 Non-return valve (Optional)
3 Heat exchanger
4 Vehicle engine

Caution: *The coolant must contain a minimum of 10% antifreeze at all times as protection against corrosion.*
Fresh water will corrode internal heater parts.

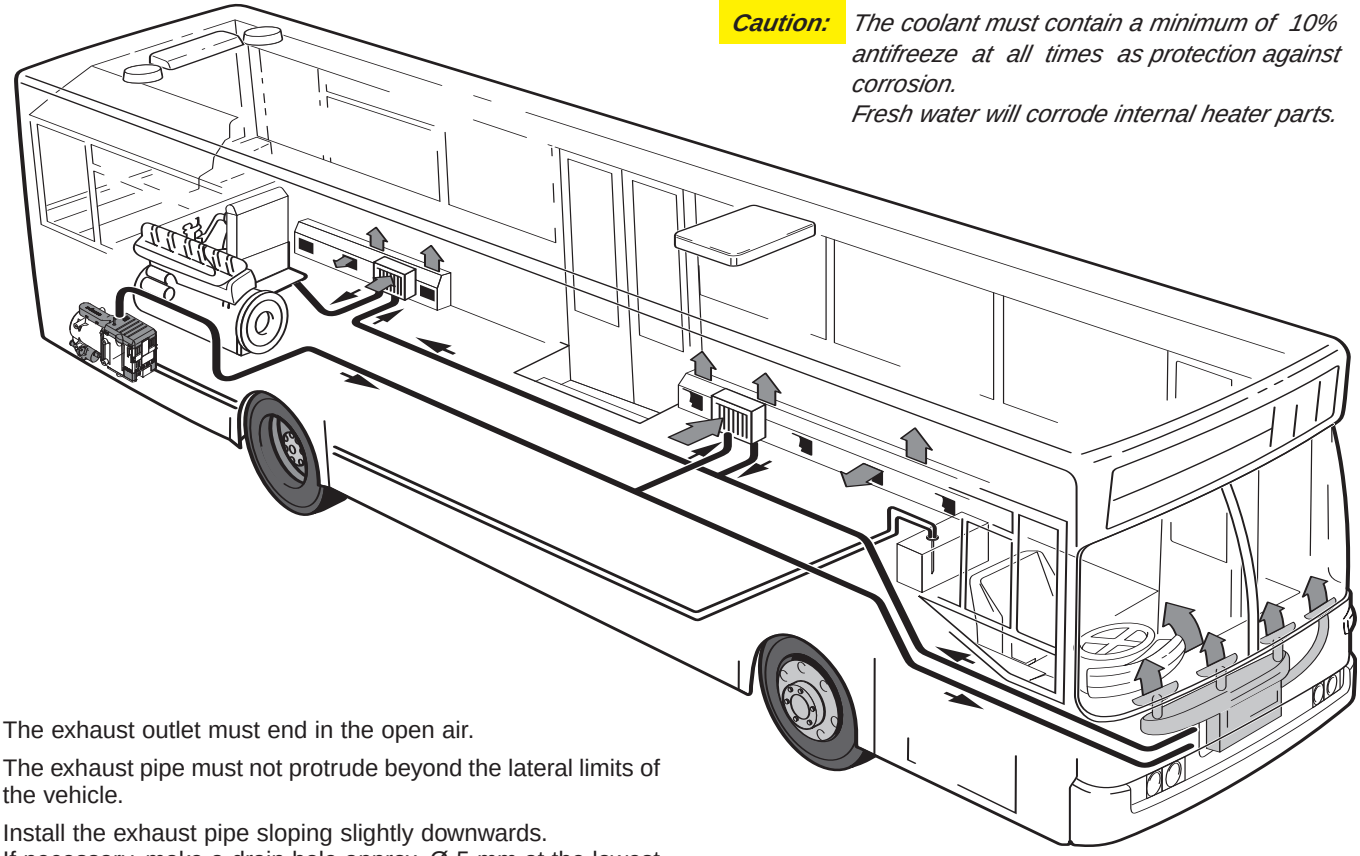

- The exhaust outlet must end in the open air.
- The exhaust pipe must not protrude beyond the lateral limits of the vehicle.
- Install the exhaust pipe sloping slightly downwards.
  If necessary, make a drain hole approx. Ø 5 mm at the lowest point to drain off condensation.
- Important functional parts of the vehicle must not be impaired (keep sufficient clearance).
- Mount the exhaust pipe with sufficient clearance to heat-sensitive parts. Pay particular attention to fuel pipes (plastic or metal), electrical cables and brake hoses etc.!
- Exhaust pipes must be fastened safely (recommended clearance of 50 cm) to avoid damage from vibrations.
- Route the exhaust system so that the emitted fumes are not sucked in with the combustion air.
- The mouth of the exhaust pipe must not get clogged by dirt and snow.
- The mouth of the exhaust pipe must not point in the direction of travel.
- Always fasten silencer to the vehicle.
- The exhaust end pipe should be much shorter than the flexible exhaust pipe from the heater to the exhaust silencer.

Fuel Quality

This means that difficulties are only to be expected for extreme drops in temperature, as also apply to the vehicle engine. Please also refer to the vehicle manual.

If no special diesel fuel is available for low temperatures, then kerosene or gasoline should be mixed with the fuel according to the following table:

Temperature	Winterdiesel	Addition
0 °C to –25 °C	100 %	–
(32 °F to –13 °F)	100 %	–
–25 °C to –40 °C	50 %*	50 % paraffin or petrol
(32 °F to –13 °F)	50 %*	–

* or 100 % special cold diesel fuel (Arctic diesel).

Note: ***HYDRONIC* M8 Biodiesel**
The heater is approved for operation with biodiesel up to a temperature of – 8°C (17.5°F) (the flowability reduces at temperatures below 0 °C (35°F)).

• When using 100 % biodiesel, the heater should be run on diesel fuel twice a year (in the middle and at the end of a heating period) to burn off possibly accumulated biodiesel deposits. To do so, let the vehicle tank run almost empty and fill with diesel fuel without adding any biodiesel. While running on this tank filling, switch the heater on 2 to 3 times for 30 minutes at a time at the highest temperature setting.

• If constantly operated with diesel / biodiesel mixtures of up to 50 % biodiesel, intermediate operation with pure diesel fuel is not necessary.

***HYDRONIC* M10 / *HYDRONIC* M12**

Both heaters are not approved for operation with biodiesel. Up to 10 % biodiesel may be added.

Installation Procedures

Fuel System

The Hydronic MII boxed unit is most commonly provided with the fuel metering pump mounted inside the box. This is to reduce installation time and to protect the pump from corrosion. If specifications cannot be met the pump must be mounted externally. See illustration for connections and specifications. All parts necessary to do the installation are included in the kit as shown.

Note: Fuel line limits must not be exceeded.
Ensure that the following conditions are met.

Bottom of the fuel metering pump must be within a height of 2'6" of the bottom of the fuel pick-up pipe.

Fuel metering pump must be within a total distance of 6'6" from the fuel pick-up pipe.

Pressure runs of less than 1.3 mtrs (50") use only 3.5mm rubber (360 75 300)

Control and Safety Devices

Emergency shutdown – EMERGENCY OFF

If an emergency shutdown – EMERGENCY OFF – is necessary during operation, proceed as follows:

- Switch the heater off with the control
- pull the fuse out
- disconnect the heater from the battery.

Fuel Line

- Route fuel lines from the fuel pick-up pipe to the heater.
- Use Espar approved fuel lines.
- Other sizes or types of fuel lines may inhibit proper fuel flow.
- Make proper butt joints using clamps and connector pieces as shown
- Use a sharp utility knife to cut plastic fuel lines to avoid burrs.

Note: Butt joints and clamps on all connections.

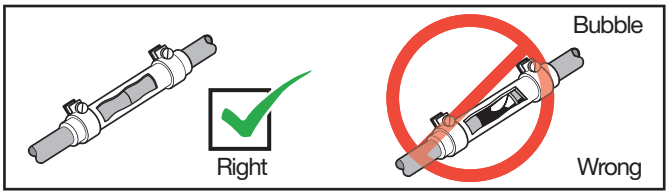

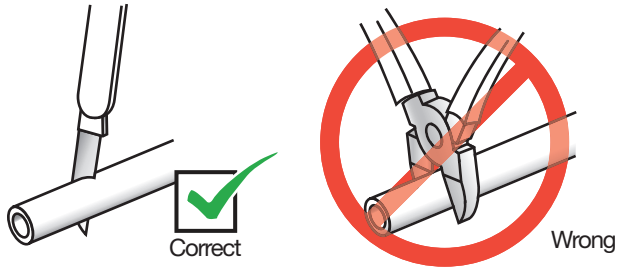

Fuel System Tolerances

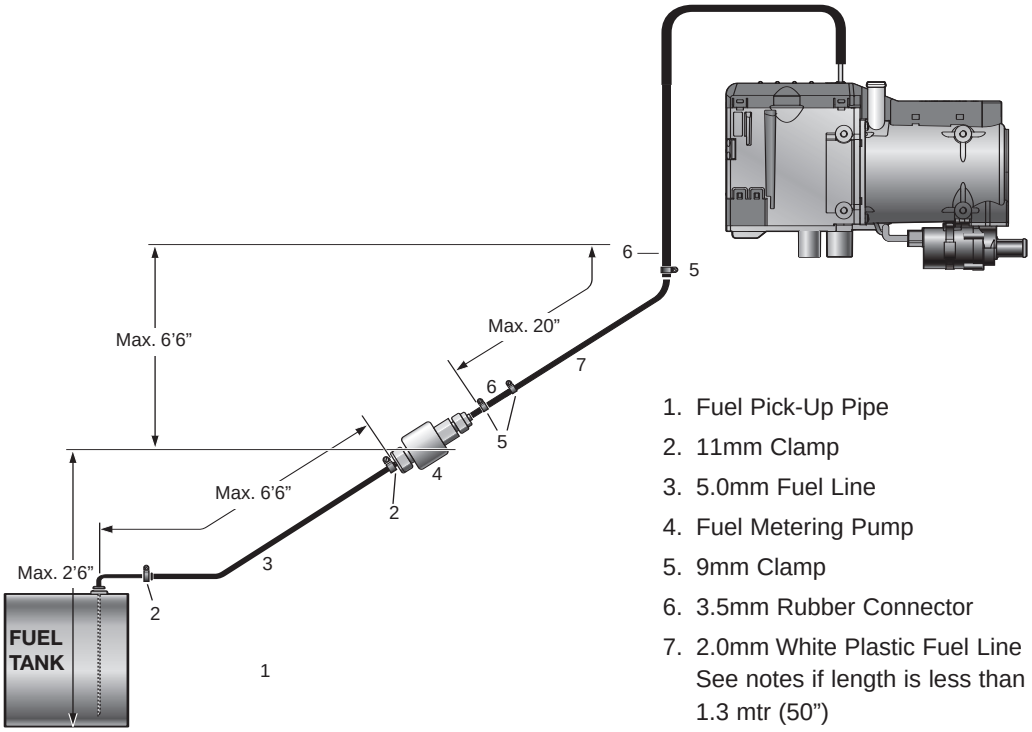

1. Fuel Pick-Up Pipe
2. 11mm Clamp
3. 5.0mm Fuel Line
4. Fuel Metering Pump
5. 9mm Clamp
6. 3.5mm Rubber Connector
7. 2.0mm White Plastic Fuel Line
   See notes if length is less than 1.3 mtr (50")

Fuel Metering Pump Installation

If the pump needs to be mounted externally follow these guidelines:

- Choose a protected mounting location close to the fuel pick-up pipe and heater.
- Using the bracket and rubber mount provided, install pump as shown.

Note: Proper mounting angle of the pump is necessary to allow any air or vapor in the fuel lines to pass through the pump rather than cause a blockage.

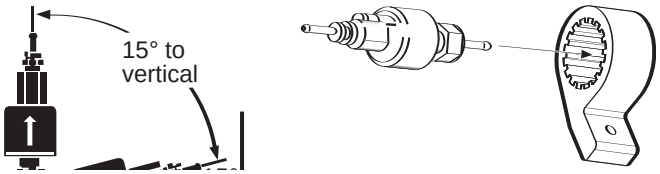

Fuel Pick-Up Pipe Installation (Standard Pick-Up)

- Choose a protected mounting location close to the pump and heater. A spare fuel sender gauge plate provides an ideal mounting location.
- Drill the mounting holes as shown.
- Cut the fuel pick-up pipe to length.
- Mount the fuel pick-up pipe as shown
- Lower the fuel pick-up pipe (with reinforcing washer) into the tank using the slot created by the two 0.6cm (1/4”) holes.
- Lift the assembly into position through the 2.5cm (1”) hole.
- Assemble the rubber washer, metal cup washer and nut.

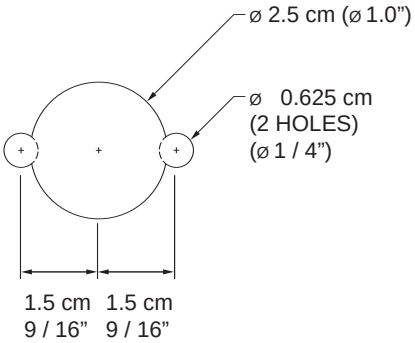

Note: Drill the two (1/4”) holes first.

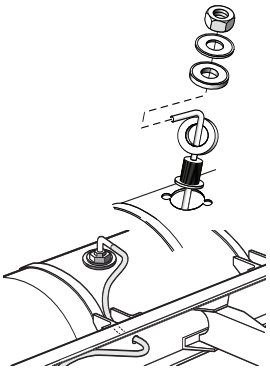

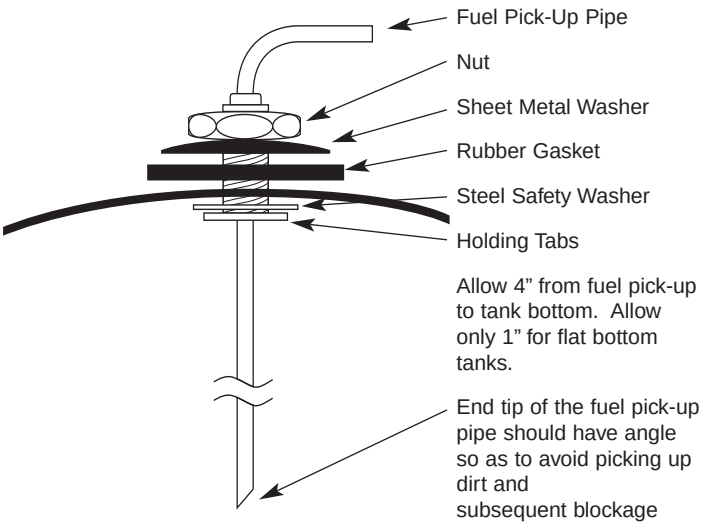

(Optional Pick-Up Pipe with NPT fitting)

- Remove an existing plug from the top of the fuel tank.
- Cut the fuel pick-up pipe to length.
- Secure the fuel pick-up pipe into position using the combined NPT compression fitting as shown

Note: NPT fittings are available in various sizes (Refer to parts catalogue).

Electrical Connections

Caution: *To avoid potential short circuit damage during instal lation, insert main fuse into the power harness after all electrical connections are complete.*

Note: All harnesses should be cut to length.
All exposed electrical connections should be coated with protective grease.

A) Power Harness.....

Note: Wire must be inserted into fuse holder prior to terminating.

- 2 core harness (**red, brown**).
- Connect red wire to fuse link and terminal.
- Attach ring terminal to vehicle battery (+).
- Connect brown wire to vehicle battery (-) using ring terminal provided.
- Insert fuse. (15A-24V, 20A-12V)

B) Switch Harness.....

- 4 core harness (**red, brown, yellow, blue/white**)
- Run to location of switch. Make terminal connections at switch. Espar has different available switches. See switch instructions for more information.

C) Fuel Metering Pump Harness.....

- 2 core harness (**green, green**).
- Fuel Metering Pump Harness is pre-connected when box is provided with pump pre-mounted.
- If mounted externally, connect wires to fuel metering pump using connector and terminals supplied, with the heater - (no polarity required).

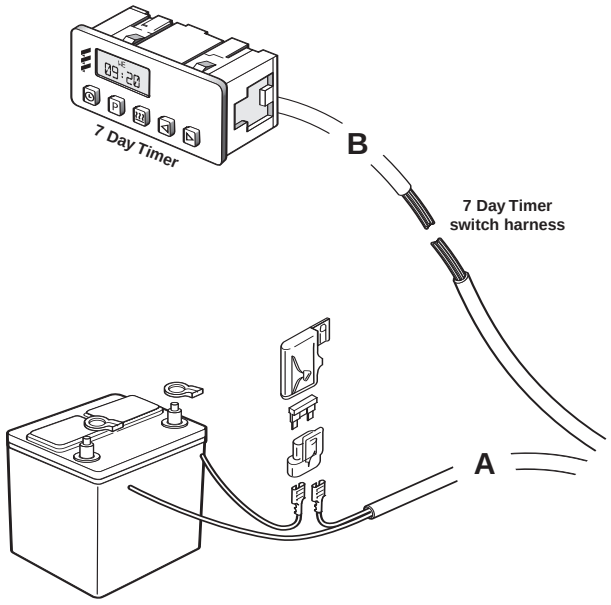

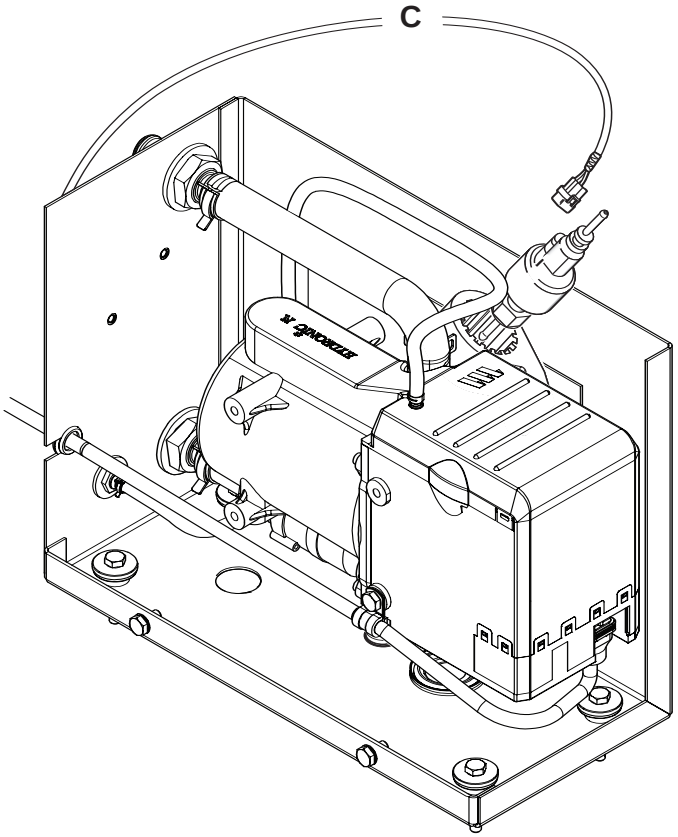

Shown is a *Hydronic* MII boxed version, 12 volt with Standard - Power, Switch, Fuel Metering Pump harnesses and optional 7 day timer.

Other timers or switch options are available.

Easy Start

Mini Timer

Programable Timer

Push and Pull Switch 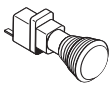

Exhaust Connection

A 30 mm flexible tube exhaust pipe with a length of 1M long is supplied with the kit for the exhaust. An exhaust clamp is needed to secure the exhaust to the the heater. The exhaust hose cannot be any longer than 2 m. Connect the exhaust as follows:

- Connect the exhaust pipe to the exhaust port on the heater and attach with clamp provided. Feed the exhaust pipe through the silicone (white) grommet on the bottom of the box.
- Run exhaust to an open area to the rear or side of the vehicle so that fumes can not build up and enter the passenger compartment or the heater combustion air intake.
- Install exhaust pipe with a slight slope or drill a small hole in the lowest point to allow water to run off. Any restriction in exhaust will cause operational problems.
- Route the exhaust pipe from the heater using holders provided.

Caution: *Run exhaust so that it cannot be plugged by dirt, water or snow. Ensure the outlet does not face into the vehicle slip stream.*

Note: 1. Exhaust hose cannot be any longer than 2m (80”)
2. Minimum length 0.2 m (8”)
3. Air intake silencer always needed.

Intake Connection

Combustion air must be drawn in from the outside of vehicle. The combustion air opening must be kept free at all times.

- Connect the air intake pipe to the intake port on the heater and secure with clamp provided.

Caution: *Do not install the intake opening facing the vehicle slipstream. Ensure that the opening cannot become clogged with dirt or snow and that any water entering the intake can drain away.*

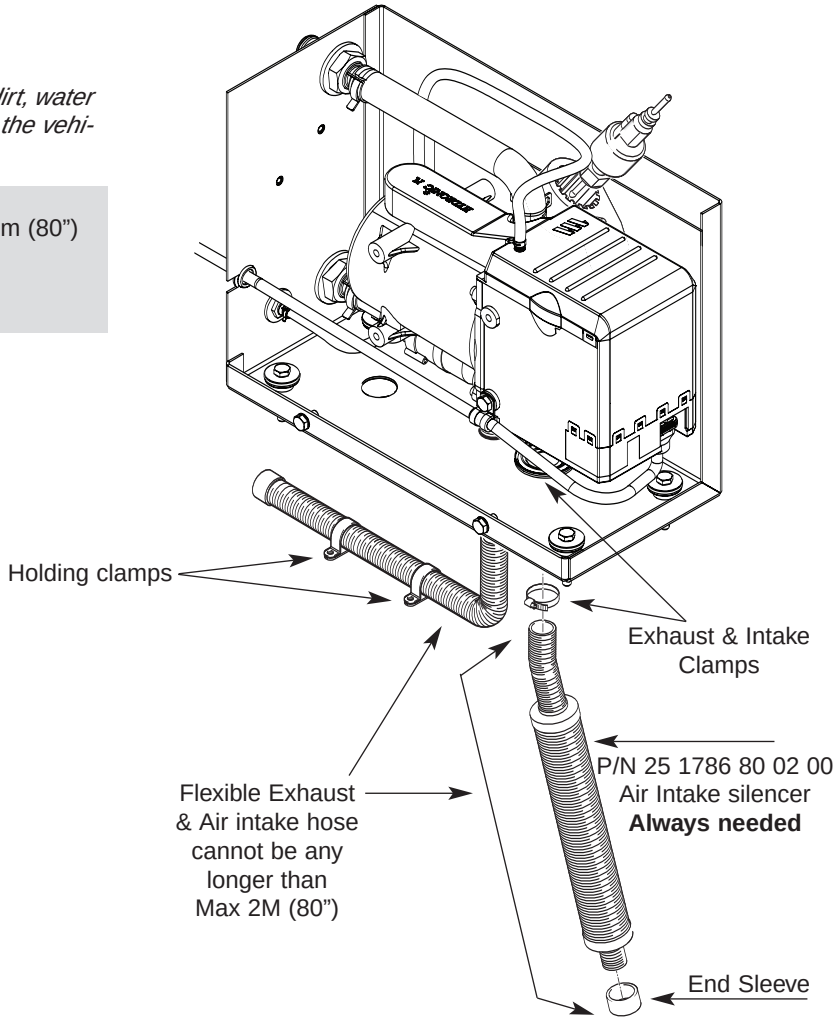

Warning: Asphyxiation Hazard

Route exhaust beyond the skirt of the cab and outside of the frame area. Route exhaust so that the exhaust fumes cannot enter the passenger compartment. Failure to comply with this warning could result in Asphyxiation.

Warning: Fire Hazard

The exhaust is hot, keep a minimum of 5cm (2”) clearance from any heat sensitive material. Failure to comply with this warning could result in fire and serious injury.

Installation Procedures

Operating Switches

A 7 Day Timer , a Push/Pull switch or an easy start timer are available for the heater.

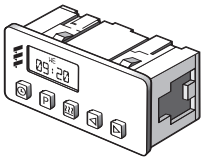

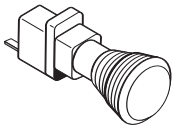

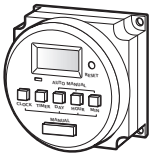

7 Day Timer Instructions

The 7 Day Timer has been designed to provide a simple means to control the operation of the heater system and to include the capability for diagnostics. This timer connects to the diagnostic circuit of the heater. The timer then displays any heater fault codes in three digit number form automatically. The timer allows for pre-selection of turn on time, up to 7 days in advance, as well as an option for run times up to 2 hours before automatically turning off. In addition, there is an on/off switch for manual operation. By default the timer is pre-set by Espar to operate for two hours. Refer to instructions provided with timer for setting options.

- Mount bezel into dash and insert timer or use Espar's optional mounting bracket and secure to dash.
- Use hardware supplied for connections.
- Connect the switch harness to the connector at the heater and run harness to switch location. (Harness should be neatly routed and secured under dashboard).
- Cut harness to length and terminate wires. Attach using connectors provided.
- Refer to timer instructions for other wiring options.

Mounting Bracket & Bezel
P/N 25 1482 70 01 00

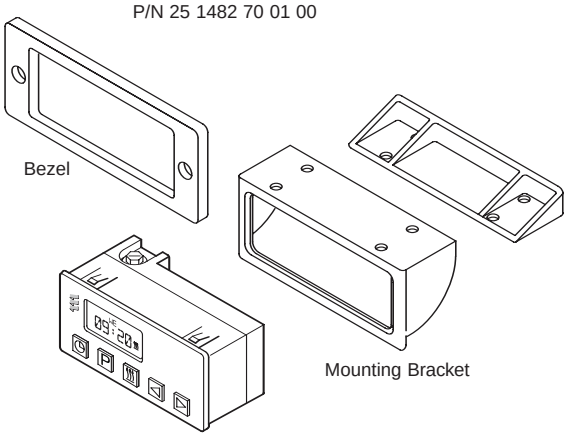

Note: If installing a remote starter, refer to remote starter instructions before terminating wires.

Option #1: Dash lights to timer - connect wire between dash lights circuit and timer at terminal #1.

Note: The timer display is automatically illuminated while the heater is operating. Connecting pin 1 to the vehicle dimmer switch will allow the timer display to illuminate with the vehicles dash lights.

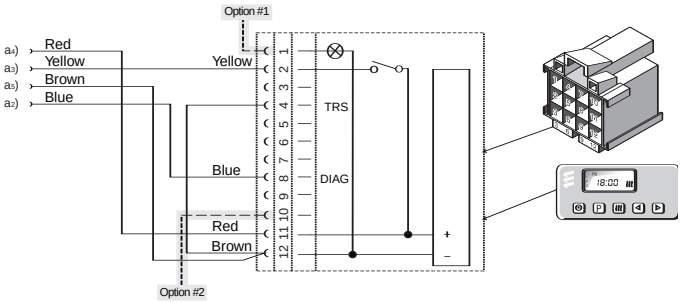

Option #2: Operate heater continuously - connect wire from ignition circuit to terminal #10.

Note: An alternative to connecting pin 10 to the vehicle ignition accessories "On" circuit may also be considered for some applications where extended run times are desired. Connecting pin 10 with the red wire will enable the heater to run continuously on manual mode.

Operating Instructions

Setting Time and Weekday
Push button once 12:00 will begin to flash (this will occur upon initial hook up to power).
Using or set the present time of day (24 hour clock). When the time stops flashing the time has been stored. The weekday will now begin to flash.
Use or to set the present weekday.
When the weekday stops flashing the weekday has been stored.

When the vehicle ignition is turned "on" the time display will appear, if optional connection on pin 10 is insatlled.
When the vehicle ignition is turned "off" the timer display will go off after 15 seconds.

Changing the Time or Day
Push and hold button until the time display begins to flash. Continue to set the time as listed in setting time and weekday.

Using the Timer with the Vehicle Ignition "Off"
Push button.
will appear on the display as well as the operation countdown timer.
The running time is factory set to maximum of 120 minutes. This running time can be reset once or permanently as desired.

Adjusting Preheat Time Once
Press button.
The will appear in the display and the preselected run time will appear in the display (maximum time of 120 minutes).
Use the or to adjust the desired run time.

Adjusting the Heater Preheat Time Permanently
(Maximum Preheat Time of 120 minutes)
Push and hold (about 3 seconds) until the display lights up and flashes. Release button.
Use or to set the new fixed preheat time.
When the display goes off the new preheat time is set.

Note: At the end of a preheat cycle the timer will turn the heater off. The heater will complete a cool down cycle and turn itself off.

Using the Heater Manually with the Vehicle Accesory "On"
(Optional wire on pin 10 is connected to the ignition lock)
Push buton.
The symbol will appear in the display next to the time of day.
The time of day will remain displayed during ignition on operation.
The heater will function continually as long as the vehicle ignition is "On".
When the vehicle ignition is turned "Off" the heater will continue to operate for an additional 15 minutes.
The run time can be altered by pressing the or buttons.
The heater can be turned off by pressing button.

Set Preheat Times into Memory
Press button until the desired memory location is shown in the display (Three memory locations are available).
Using the or buttons set the desired preheat start time of day.
When the time stops flashing the time of day is set.
Using the or buttons set the desired day of the week.
When the day of the week stops flashing the day is set.

To Use Preset Start Times
Press the button until the desired memory location appears in the display.
The heater will start at the day and time displayed.
The display will go off in 15 seconds. The memory location number will stay displayed (1, 2 or 3).
Note: When preset is chosen this symbol will flash red.

To Turn Heater "Off" - All Modes
Press the button once.
The heat signal to the heater will be turned "Off".
The heater will do a normal cooldown and turn itself "Off".

Note:
- This timer is equipped to display fault code numbers if the heater should shut down due to an operating fault. The fault code will show in the timer display next to the flashing heat wave symbol. This applies to all current model heaters when the blue diagnostic wire is connected.
- If the timer is purchased without the harness kit, the following heaters will need a load relay intalled (D8Lc, D7W, D12W, D24W and D30W), These heaters carry a load on the switch wire. (i.e. fuel metering pump or noid sole valve).
- An outside temperature sensor is available as an option.

Wiring Connections at Connector

Terminal 1	Power from vehicle dash lights.
Terminal 2	Heater switch wire - Yellow wire.
Terminal 4	Connect to vehicle ground.
Terminal 6	Temperature setting "+" (air only).
Terminal 8	Heater diagnostic lead - blue wire.
Terminal 9	Temperature setting "-" (air only).
Terminal 10	To vehicle "ACC" accessory for continuous overnight use, and for unlocking ECU.
Terminal 11	Positive power from heater - red "+".
Terminal 12	Ground lead from heater - brown "-".
Terminal 3,5,7	Left blank, not required.

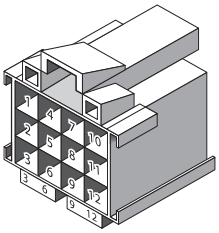

Control Unit Locking
The control unit may becomed locked due to one of the following conditions:

1. **Overheat** – If the heater overheats three times in succession, fault message F15 is displayed and the control unit is locked.
2. **Too many failed start attempts -** If the heater performs many start attempts in succession (i.e. Fault 52), fault messsage F50 is displayed and the control unit is locked.

Unlocking Control Units and Erasing Fault Memory

Note: The electrical connection for the ignition / accessory wire to the timer terminal #10 must be in place.

1. Turn on the vehicle ignition to activate timer display.
2. Press the key. The current fault code (i.e. F15 or F50) is now displayed.
3. Press the key and hold it down and press the key within two seconds. The timer is now in the retrieval mode.
4. Turn off the ignition.
5. Press the key and hold it down and press the key within two seconds and hold it down.
6. While holding down keys, turn ignition on and wait until the following display appears:

7. Press the key to turn the heater off.
8. Press the key to turn the heater on.
9. Repeat step three. The following display appears:

10. The control unit lock is cancelled after three seconds and the heater starts.

Retreaving the Stored Fault Codes

1. Press the key. The heater is switched on.
2. Press the key and hold it down and press the key within two seconds. The current fault code is now displayed (Example: AF:64).
3. The stored fault codes (maximum of 5) can now be retrieved using the arrow keys and (Example: F1:64).

Note: Consult the Troubleshooting and Repair manuals for code definition and corrective action. If the heater is not being operated using the 7-day timer, fault code retrieval can be obtained using the "Fault Code Retrieval Device", part number: 20 2900 70 50 20.

Push/Pull Switch

- Mount switch in a location where it is easily accessible
- Mount using hardware supplied
- Connect the switch harness to the connector at the heater and run the harness to the switch location
- Cut harness to length at the switch and install terminals
- Connect wiring as described below

Note: Switch light glows when pulled out and is off when pushed in.

Brown- 31	Power from battery "-"
Red- K(15)	Power from battery "+"
Yellow-15(K)	Switch control to the heater
Blue/White	Diagnostic from heater (disregard - tape end and tie off to the side)

P/N 5670007 (12v)
P/N 5670008 (24v)

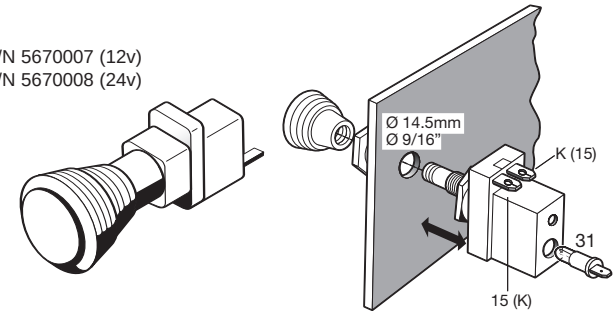

Programmable Timer

P/N 5670100 (12v)
P/N 5670099 (24v)

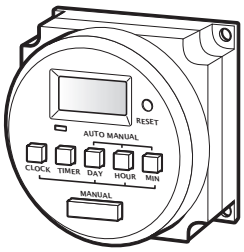

IMPORTANT: *This electronic timer has a maximum loading printed on the rating label and under no circumstances should this be exceeded.*

Features:

- Up to 8 ON and OFF switches a day/56 ON and OFF switches per week
- Option to program individual days or 8 different weekday groups
- Minimum switching period of one minute
- Summer/Winter time changeover
- Easy to read LCD display
- Manual Override button
- Battery Back-up

Note: As soon as you have connected 12 volts you will have to push down the RESET button to activate the timer.

Setting the time

Press and hold the CLOCK button.
Press DAY button to select the correct day.
Press HOUR button to select the correct hour.
Press MIN button to select the correct minutes.
When the MIN button is released the time will be set.

Holding down or repeatedly pressing the appropriate button will advance the days, hours and minutes.

Programming of Switching Times

The Auto Time Switch has the capacity for 8 ON/OFF switches. By using the blocks of days available, you can save program capacity. The block days are:

MO, TU, WE, TH, FR, SA, SU – Individual days of the week
MO, TU, WE, TH, FR
SA, SU
MO, TU, WE, TH, FR, SA
MO, WE, FR
TU, TH, SA
MO, TU, WE

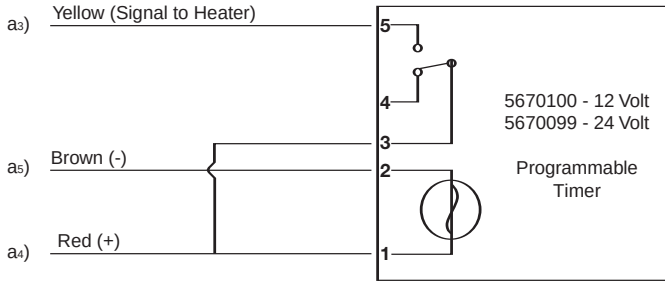

Programmable Timer Instructions

Each ON time and each OFF time, the days, hours and minutes must be set.

Press the TIMER button once to set the first ON time – you will see "on" and the number "1" appears.

Enter the first ON time.

Press the DAY button to choose the required day or block of days.

Set the hour and minutes using the HOUR and MIN buttons.

Press TIMER button to save first on time and are ready to set first off time you will see "OFF" and the number "1" appear.

Use the DAY, HOUR and MIN buttons as above.

Press the TIMER button to save off time.

Repeat the same steps for the remaining 7 ON and OFF settings as desired.

When you have set the required ON/OFF settings, press the CLOCK button to return the display to the clock.

The timer is now ready to operate.

Note: You can check the settings you have programmed by pressing the TIMER button repeatedly. Each set ting will appear on the screen.

Notes:

Pre-Start Procedures

Upon completion of installation prepare the heater as follows:

- Check all fuel, electrical and plumbing connections.
- Refill the engine coolant.
- Bleed air from the coolant system by running the engine and refilling the antifreeze as needed. Resecure heater hose.
- Run engine to further bleed the system
- Top up engine coolant.

Start Up

Once switched on, the following sequence occurs:

- Control unit does a systems check (flame sensor, tempera ture, and various other control unit checks).
- Water pump starts circulating coolant fluid.
- Combustion air blower starts.
- Glow pin begins to preheat 20-30 secs.
- After about 20-30 seconds the Fuel Metering Pump starts delivering fuel and the combustion air blower ramps up gradually.
- Once ignition takes place the flame sensor alerts the control unit and the control unit shuts off the glow pin (ignition time: 1.5 - 2 minutes).

Note: If the heater fails to start the first time it will automatically attempt a second start. If unsuccessful the heater will shut down completely.

Note: On initial start up the heater may require several start attempts to self prime the fuel system.

Heating Mode

At the initial start the heater is operated with the “POWER” stage until the water temperature exceeds the “POWER” / “HIGH” changeover threshold.

HYDRONIC M8 / M10

Then, depending on the heat requirement, the heater switches to the “HIGH – MEDIUM – LOW – STAND BY” stages.

If the heating requirement in the “LOW” stage is so small that the cooling water temperature reaches 85 °C, the heater switches from “LOW” to “STAND BY”.

HYDRONC M12

Then, depending on the heat requirement, the heater switches to the “HIGH – MEDIUM 1 / MEDIUM 2 / MEDIUM 3 – LOW – STAND BY” stages.

If the heating requirement in the “LOW” stage is so small that the cooling water temperature reaches 85 °C, the heater switches from “LOW” to “STAND BY”.

This is followed by the after-run with additional after glowing of the glow plugs (like when heater is switched off).

After the cooling water has cooled to approx. 70 °C the HYDRONIC M8 / M10 heater starts in the “MEDIUM” stage, the HYDRONC M12 heater in the “MEDIUM 1” stage.

If the cooling water temperature reaches approx. 55 °C the temperature sensor switches the vehicle fan on.

Temperature Drop

Temperature drop only becomes active while the vehicle is runing and if the heater is switched on. The control stages are reached earlier and the heater‘s control action is adjusted to the lower heat requirement.

The temperature can be lowered by connecting the positive cable (+) to connector S2, terminal C3 of the heater (see circuit diagrams).

Switching Off

With the switching off the heater starts the after-run of 180 sec. During the after-run the first glow plug is switched on after 90 seconds for a period of 45 seconds, then the second glow plug is switched on until the end of the after-run.

Safety Equipment

The heater is equipped with the following control and safety devices.

- If the heater does not ignite within 74 seconds after the fuel starts to pump, the start is repeated.
  If the heater still does not ignite after another 65 seconds of fuel being pumped, the heater is automatically shut down.
  After an unacceptable number of failed start attempts, the control box is locked.*
- If the flame goes off by itself during operation, the heater is restarted.
  If the heater does not ignite within 74 seconds after the fuel starts to pump again, the heater is automatically shut down.
  The shutdown on faults can be cancelled by briefly switching off and on again.
- In the case of overheating (e.g. water shortage, poorly ventilated cooling water circuit), the overheating sensor triggers, the fuel feed is interrupted and the heater is automatically shut down.
  Once the cause of the overheating has been eliminated, the heater can be re-started by switching it off and on again (provided that the heater has cooled down sufficiently, cooling water temperature < 70 °C).
  After the heater has been shut down due to overheating an unacceptable number of times, the control box is locked.*

* The ECU can be unlocked and the fault can be displayed with:

- EasyStart.
- Diagnostics Unit.
- EDiTH diagnostics software.

For operation and fault list, please refer to the enclosed operating instructions or these troubleshooting and repair instructions.

- If the lower or upper voltage limit is reached, the heater will shut down.
- The heater does not start up if the electric cable to the metering pump is not connected.
- If one of the two glow plugs is defective, the start sequence takes place with one glow plug only .
- The speed of the blower motor is continuously monitored. If the blower motor does not start up, if it is blocked or if the speed differs by > 12.5 % of the desired speed, the heater will automatically shut down after 60 sec.
- The function of the water pump is continuously monitored.

Warning:

The heater must be switched off while any fuel tank on the vehicle is being filled.

The heater must not be operated in garages or enclosed areas.

Heater Wiring

The heater is to be connected up electrically according to the EMC directives.

Caution:

EMC can be affected if the heater is not connected up correctly.

For this reason, comply with the following instructions:

- *Ensure that the insulation of electrical cables is not damaged.*

  Avoid:

  chafing, kinking, jamming or exposure to heat.
- *In waterproof connectors, seal any connector chambers not in use with filler plugs to ensure they are dirt-proof and water-proof.*
- *Electrical connections and ground connections must be free of corrosion and firmly connected.*
- *Lubricate connections and ground connections outside the heater interior with contact grease.*

Note: Comply with the following when wiring the heater and the control unit: fuses and controlers.

- Electrical leads, must be positioned in the vehicle so that they can function perfectly under normal operating conditions without impairment (e.g. due to heat exposure, moisture, etc.).

- The following wire gauge are to be used between the battery and heater.

  This ensures that the max. allowable voltage drop in the cables does not exceed 0.5 V for 12 V or 1 V for 24 V rated voltage.

  Cable cross-sections for a cable length (plus cable + minus cable) of:

  – up to 5 m (plus cable + minus cable) = 10 AWG

  – from 5 m up to 8 m (plus cable + minus cable) = 8 AWG

- If the (+) cable is to be connected to the fuse box, the vehicle's cable from the battery to the fuse box must also be included in the calculation for the total cable length and re-dimensioned if necessary.

- Insulate unused cable ends.

If replacing the HYDRONIC 10 / M with the HYDRONIC M-II, the cable harness installed in the vehicle is retained and continues to be used, it is necessary to remove the 12-pin connector using the terminal removal tool and to rewire it according to the following table.

12-pin Connection Pin Assignment

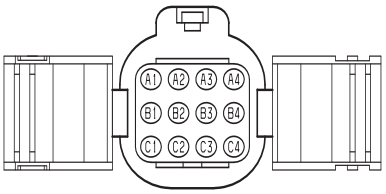

Connector is shown from the lead entry side.

Cable harness *HYDRONIC* M		Rewiring 12-pin connector	
Connection	Cable colour	*HYDRONIC* M PIN	*HYDRONIC* M-II PIN
Metering pump	green	C4 →	A1
Terminal (-)	brown	C3 →	A2
Terminal (+)	red	C2 →	A3
Plus signal main battery switch	white / red	C1 →	A4
Plus signal Solenoid valve relay	–	B4 →	B1
Diagnosis	blue	B3 →	B4
Plus signal ADR auxiliary drive	violet	B2 →	B3
Third party control Water pump	–	B1 →	B2 remains unused
Blower relay	red / yellow	A4 →	C1
D+ for ADR operation	violet / green	A3 →	C2
Temperature drop	–	A2 →	C3
Heater ON	yellow	A1 →	C4

Parts list for wiring diagram, *Hydronic* M-II - 12 Volt / 24 Volt

1.1 Blower motor
1.2 Glow pin I
1.2.1 Glow pin II (optional 12 kW)
1.5 Overheating sensor
1.12 Flame sensor
1.13 Temperature sensor

2.1 Control unit
2.2 Fuel metering pump
2.5.7 Relay, vehicle blower (fan)
2.5.18 Relay, changeover water circuit
(To be fitted by customer if required)
2.7 Main fuse 12 volt = 20A
24 volt = 15A
2.7.1 Fuse, control option 5A
2.7.5 Fuse, vehicle blower (fan) 25A
2.12 Water pump

5.1 Battery
5.10 Vehicle blower (fan)

a) Connection to 7 day timer, programmable timer, easy start or push pull switch
b) Water circuit change-over: Relay makes contact at 68°C and breaks contact at 63 °C water temperature (with temperature drop 58 °C / 45 °C)
c) Temperature drop
x) Disconnect cable

a_2 Diagnosis
a_3 Switch on signal
a_4 Power supply plus
a_5 Power supply minus

Connectors and bush holdings are shown from the cable inlet side.

Connector pin assignment: 12-pin connector (external).

PIN-No.	Connection
A1	Dosing pump
B1	Solenoid valve, optional
C1	Relay, blower
A2	Battery (-)
A3	Battery (+)
B2	Diagnosis cable (OEM)
B3	TRS signal (ADR)
C3	Temperature drop
B4	Diagnosis
C4	Heater ON

Hydronic M-II, Wiring Diagram - 12 Volt / 24 Volt

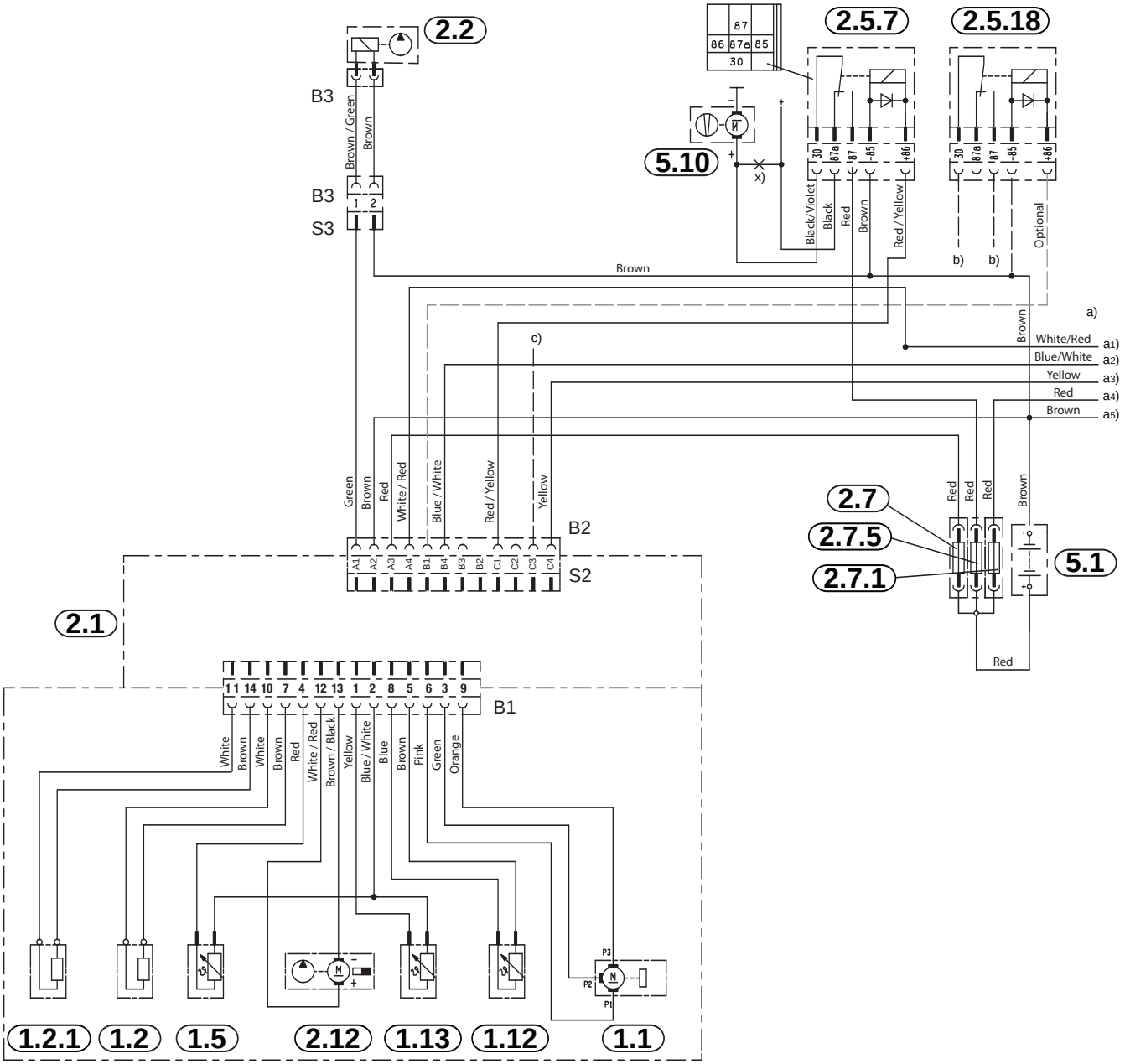

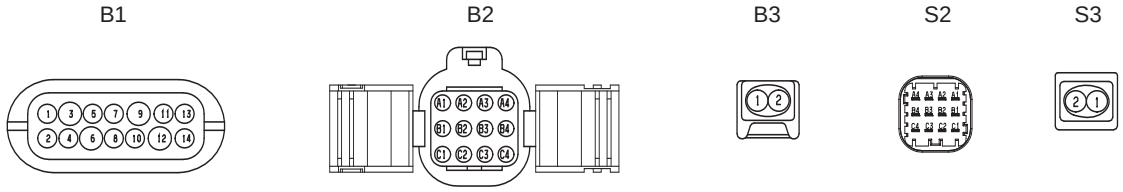

Hydronic M-II, Controler Options

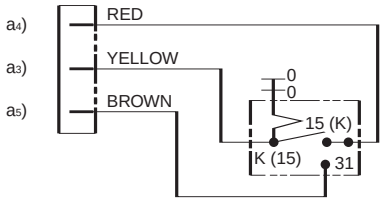

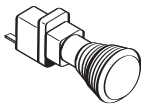

Push / Pull Switch

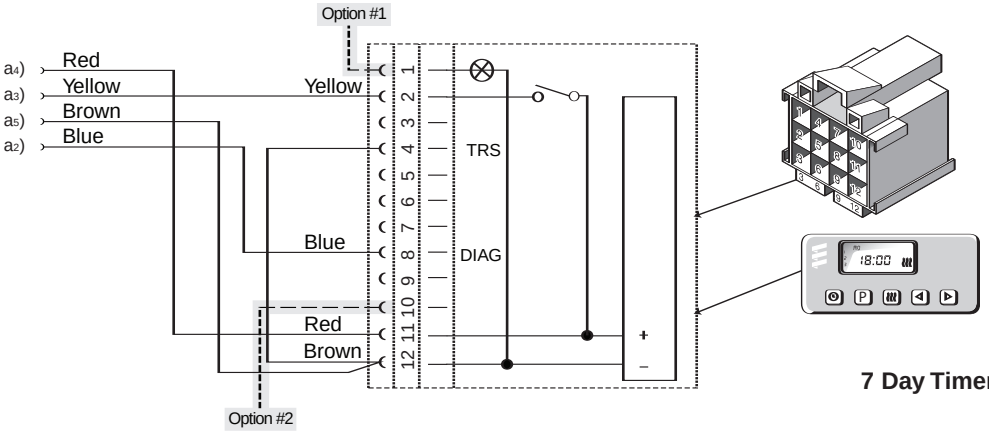

7 Day Timer

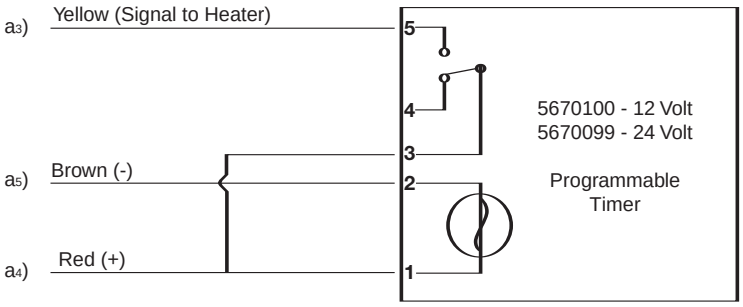

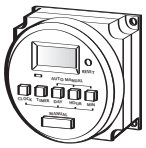

Programmable Timer

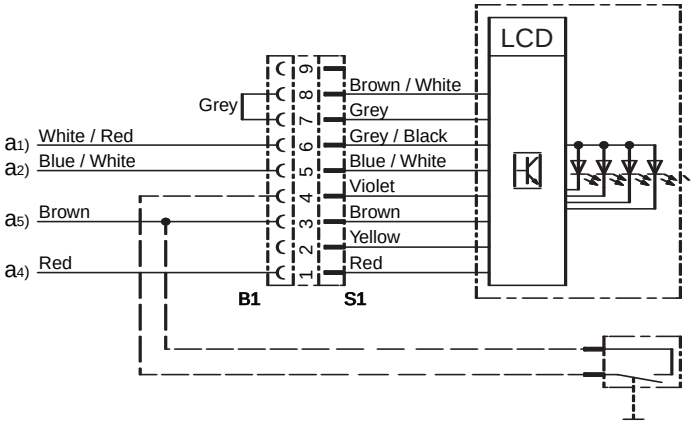

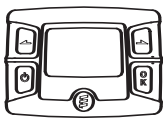

Easy Start T

Optional On/Off Switch

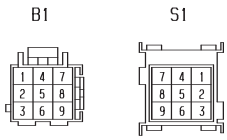

Periodic Maintenance

- Check coolant hoses, clamps, and make sure all valves are open. Maintain the engine manufacturers recommended coolant level and ensure that the heater is properly bled after service on or involving the coolant system.
- Visual check of all fuel lines for leaks. Check and if necessary replace fuel filter inserts.
- Visual check of electrical lines and connections for corrosion.
- Run your heater at least once a month during the year (for a minimum of 15 minutes).
- Maintain your batteries and all electrical connections in good condition. With insufficient power the heater will not start. Low and high voltage cutouts will shut the heater down automatically.
- Use fuel suitable for the climate. Blending used engine oil with diesel fuel is not permitted.

Troubleshooting

Basic Troubleshooting

In the event of failure there are several items which should be checked first before any major troubleshooting is done.

Check:

- Fuses.
- Electrical lines and connections
- Interference in Combustion air and Exhaust pipes.
- Fuel in the tank.
- Battery voltage on heater side of harness
- Coolant flow

Self Diagnostics

The heater is equipped with self diagnostic capability. You can retrieve information on the heaters last 5 faults using the Espar 7 day timer, Espar's Fault Code Retrieval Device or ISO adapter and computer.

Multifunction

Espar's 7 day timer has a fault code retrieval device built into the unit. This function automatically activates if the heater is experiencing problems.

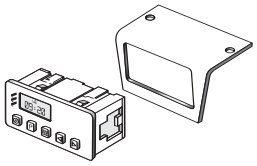

- Fault codes appear on the LCD display screen.
- Codes can then be translated from the charts on the following pages.
- Pg 10 - 17 for more detailed instructions.

Fault Code Retrieval Device

Equipment Face and Controls

Symbols seen on the display face are as follows:

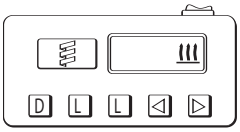

AF	Actual fault.
F1-F5	Up to five stored faults can be accessed. The AF and F1 are the same.
	This sign is displayed when the heater is in operation.
DIAG	The word (Diagnostic) will come on when the diagnostic number is requested.
000	Three digit diagnostic fault code number.

Hook Up

- Disconnect the main harness from heater and insert adapter cable harness between them.
- Connect adapter cable to the cable loom of the Fault code retrieval device.
- Start diagnostic unit - switch heater on from switch.

Instructions:

- Switch the fault code retrieval device on and wait 10 seconds.
- Press the "D" button.
- Wait 3-5 seconds for the current fault code to appear (AF).
- To review the previous faults use the arrow buttons (F1= Most Recent, F5= Oldest).
- To erase the faults that are in memory press both "L" keys at the same time.
- See the fault code chart on following pages for code number descriptions.

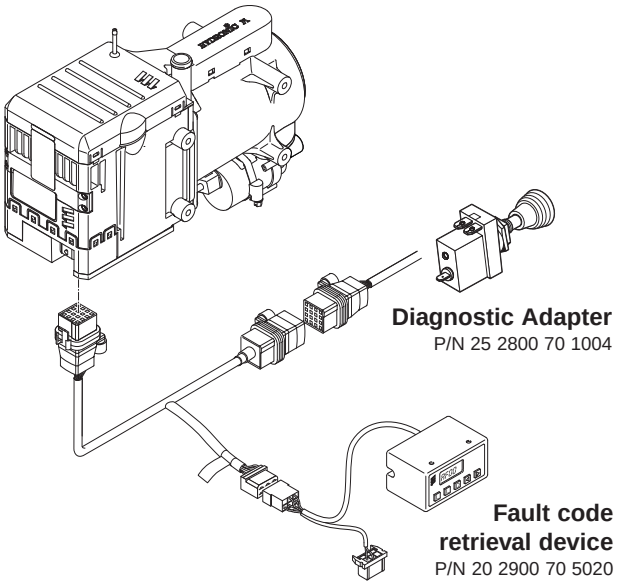

Fault Code	Fault Description	Causes / Repair
— — —	Diagnosis not possible	• Adapter cable not connected properly. • Diagnostic connection damaged. • Internal control box fault, replace control box / blower unit.
000	No faults	— —
005	Warning Short circuit in "Burglar Alarm" output	• Check connection and / or lead for continuity, short circuit and damage.
009	ADR / ADR99 shutdown	• Switch the heater off and then on again – The shutdown must be cancelled by D+ or HA / NA.
010	Overvoltage cutoff	Overvoltage applied to control box for at least 6 seconds –> heater not working. • Disconnect heater / cable harness plug-in connector, start the vehicle engine, measure the voltage. Connector B2, PIN A2 and A3: – If the voltage is >15 volt or >30 volt, check the generator regulator and / or the battery.
011	Undervoltage cutoff	Undervoltage applied to control box for at least 20 seconds without interruption –> heater not working. • Disconnect heater / cable harness plug-in connector, start the vehicle engine, measure the voltage. Connector B2, PIN A2 and A3: – If the voltage is <10 volt or <20 volt, then check the fuses, the supply cables, the negative connections and the positive support point at the battery for voltage drop (corrosion).
012	Overheating	Overheating sensor signals temperature greater than 120°C. • Measure the resistive value of the overheating sensor, connector B1, PIN 2 and 4, for measured values. See page 44. – If overheating sensor ok, check connection leads for continuity, short circuit and damage.
014	Possible overheating dettected (Temperature difference evaluation)	Difference between measured value in overheating sensor and temperature sensor is too large. • Measure the resistive value of the temperature sensor, connector B1, PIN 2 and 4 and connector B1 PIN 1 and 2; for measured values. See page 44. – If temperature sensor ok, check connection leads for continuity, short circuit and damage.
015	Too many overheats, Control box is locked	Control box locked due to too frequent overheating (fault code 012 or 014) in succession. • Unlock the control box by deleting the fault memory, see pages 16 and 25.
017	Overheating, Sensor threshold exceeded	Max. temperature exceeded at the overheating sensor (180°C). • Check overheating sensor —> fault code 012. • Check control box.
019	Glow plug 1, Ignition energy too low	Glow plug 1 energy input is too low (< 2000 Ws) • Check glow plug for continuity, short circuit and damage —> Fault code 020. • Check control box.

Fault Code	Fault Description	Causes / Repair
020 021 022	Glow plug 1, interruption Glow plug 1, overload / short circuit downstream of (–) Glow plug 1, short circuit downstream of (+)	• Measure cold resistance of the glow plug at approx. 20°C ambient temperature – connector B1, PIN 7 and 10. If the values are as follows the glow plug is ok, if the values differ – replace the glow plug. Measured value: • 12 volt – glow plug = 0.42 – 0.6 ohm • 24 volt – glow plug = 1.2 – 1.9 ohm – If the glow plug is ok, check the lead harness of the glow plug for continuity, short circuit and damage.
023 024	Glow plug 2, interruption Glow plug 2, overload / short circuit downstream of ground	• Measure cold resistance of the glow plug at approx. 20°C ambient temperature – connector B1, PIN 11 and 14. If the values are as follows the glow plug is ok, if the values differ – replace the glow plug. Measured value: • 12 volt – glow plug = 0.42 – 0.6 ohm • 24 volt – glow plug = 1.2 – 1.9 ohm – If the glow plug is ok, check the lead harness of the glow plug for continuity, short circuit and damage.
025	Diagnostic line fault Heater remains ready for operation	• Check diagnostics cable for continuity, short circuit and damage – connector B2, PIN B4. – if ok, check control box.
026	Glow plug 2, short circuit downstream of (+)	see fault code 023 / 024
029	Glow plug 2, Ignition energy too low	Glow plug 2 energy input is too low (< 2000 W) • Check glow plug for continuity, short circuit and damage. —> Fault code 023. • Check control box.
033 033 033 034	Burner motor, interruption Burner motor, overload Burner motor, speed error / blocked Burner motor short circuit downstream of (+) or (–)	• Check the burner motor's connection leads for continuity, short circuit and damage – connector B1, PIN 3, 6 and 9. • Check burner motor for easy movement by manually rotating the impeller. – if not smooth running, remove the blockage. – if ok, replace control box / blower unit.
037	Water pump not working	• Check water pump. Apply voltage to the water pump – connector B1, PIN 12 and 13 (power input = max. 4 A or 2 A) – If water pump does not rotate, replace water pump. – If water pump is ok –> replace control box / blower unit.
041 042 043	Water pump, interruption Water pump Overload short circuit Water pump Overload downstream of +Ub	• Check the water pump's connection and lead harness for continuity, short circuit and damage – connector B1, PIN 12 and 13. – If ok, check water pump —> fault code 037. Water pump running dry. • Vent heater (water shortage), open heater slide valve, check water flow rate

Fault Code	Fault Description	Causes / Repair
047	Metering pump Overload short circuit	• Check the metering pump's connection and lead harness for continuity, short circuit and damage – connector B2, PIN A1. – If ok, check the resistance of metering pump – setpoint value approx. 20 ohm.
048	Metering pump interruption	
049	Metering pump Overload downstream of +Ub	
050	Too many attempted starts Control box is locked	Control box locked due to repeated switching on in succession without flame detection (fault code 052). • Check fuel supply, exhaust and combustion air system. • Check glow plug –> see fault code 019 to 024 / 026 / 029. • Check flame sensor –> fault code 064 / 065. • Unlock the control box by deleting the fault memory.
052	Exceeding of safety time	No flame detected within the start phase. Flame sensor value < 80°C, therefore automatic shutdown because safety time exceeded. • Check fuel supply, exhaust and combustion air system. • Check glow plug –> see fault code 019 to 024 / 026 / 029. • Check flame sensor –> fault code 064 / 065.
053	Flame cutout in "POWER" control stage	Heater ignited (flame detected) and signals flame cutout during a power stage. • Check fuel quantity, blower speed, fuel supply, exhaust and combustion air system.
054	Flame cutout in "HIGH" control stage	• Check flame sensor –> fault code 064 / 065.
055	Flame cutout in "Medium" control stage (D 8 W / D 10 W) "Medium1" control stage (D 12 W)	
056	Flame cutout in "Medium 2" control stage (D 12 W)	
057	Flame cutout in "Medium 3" control stage (D 12 W)	
058	Flame cutout in "LOW" control stage	
059	Too rapid rise in water temperature	• Vent air from system, open heater slide valve, check water flow rate. • Check temperature sensor –> fault code 060 / 061
060	Temperature sensor interruption	Temperature sensor signals temperature value outside the measuring range.
061	Temperature sensor short circuit	• Measure the resistive value of the temperature sensor, Connector B1, PIN 1 and 2; for measured values. See page 44. – If temperature sensor ok, check connection leads for continuity, short circuit and damage.
064	Flame sensor interruption	Flame sensor signals temperature value outside the measuring range.
065	Flame sensor short circuit	• Measure the resistive value of the flame sensor – connector B1, PIN 5 and 8; for measured values. See page 45. – If flame sensor ok, check connection leads for continuity, short circuit and damage.

Fault Code	Fault Description	Causes / Repair
071	Overheating sensor interruption	Overheating sensor signals temperature value outside the measuring range. • Check overheating sensor –> fault code 012.
072	Overheating sensor short circuit	
074	Overheating detection hardware is defective, operating lock-out	• Control box is defective. Replace control box / blower unit.
090	External reset	• Control box reset by external interference voltage. Check voltage supply, e.g. battery, leads, generator, fuses.
091	Internal reset	• Internal control box fault, replace control box / blower unit.
092	ROM error	
093	RAM error, at least one RAM cell is not working	
094	EEPROM error, checksum error within the area of the operating data, diagnostic parameters or calibration values	
095	Invalid data record, checksum error	
096	Internal temperature sensor is defective / ECU too hot	
097	Internal device error	
098	Main relay is faulty	
099	Too many resets, operating lock-out	

Repair Instructions

The permitted repair work on the heater is described in the "Repair Instructions" chapter. The heater must be removed from the vehicle for the repair work to be carried out. The heater is assembled in the reverse order, note and follow any additional instructions.

Note: After completing all the work and installing the heater in the vehicle, perform a functional check on the heater.

Always observe the following safety instructions before working on the heater

Warning - Risk of injury, burns and poisoning

- Ensure power is disconnected from heater and that coolant is cool before dismantling the heater.
- The heater must not be operated in closed rooms such as garages or workshops.

  Exception:

  Exhaust suction available directly at the entry to the exhaust pipe on the heater.

Caution:

- *The seals of dismantled components must be renewed.*
- *During repair work, check all components for damage and if necessary replace.*
- *Check connector contacts, plug-in connections and cables for corrosion and damage and if necessary repair.*
- *Only use Espar spare parts if replacements are necessary.*
- *After working on the coolant circuit the level of the coolant must be checked and if necessary topped up according to the vehicle manufacturer's instructions.*

  The coolant circuit must then be vented.
- *Operation or the "after running" of the heater ma only be stopped in an emergency (Turn off switch, remove fuse or disconnect battery) by interrupting the battery current (risk of heater over-heating).*

Terminal Removal Tools are used to release plug-in contacts in a connector housing.

Terminal Removal Tool 1.6mm 206 00 205

Terminal Removal Tool 2.8mm 206 00 215

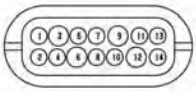

Heater Components

1 Impeller cover
2 O-ring 117.07 x 3.53
3 Cover, side
4 Impeller
5 Glow plug 1
6 Glow plug 2
7 Spark plug socket lining
8 Combustion chamber
9 M5 x 16 TAPTITE / DIN 7500 TORX screw
10 Control box / blower unit
11 Flame sensor
12 Cable tie
13 Electric motor cover
14 M5 x 16 TAPTITE / DIN 7500 TORX screw
15 M4 x 12 TAPTITE / DIN 7985 TORX screw
16 Compression spring
17 Overheating sensor
18 Temperature sensor
19 Overheating / temperature sensor cable loom
20 Jacket with heat exchanger
21 M5 x 25 TAPTITE / DIN 7500 TORX screw
22 Grommet
23 Combustion chamber seal
24 Water pump cable loom connector
25 Hose clip
26 Water pump
27 O-ring 19.8 x 2.3
28 14-pin connector

Preparatory work for all repairs

Figure 1 and 2

- Clamp the removed heater in a retaining device (vice).
- Using 2 screwdrivers, always undo 2 snap connections of the impeller cover at a time, starting at the control box/blower unit. Keep to the order shown in the figure (1.– 8.)
- Remove cover.
- Remove O-ring (2).

Note: The O-ring (2) must always be renewed.

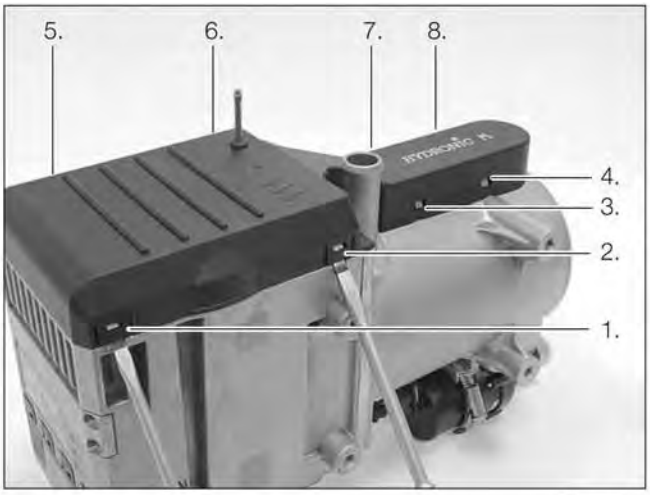

Figure 1

2 O-ring

Figure 2

Remove overheating sensor and temperature sensor

Figure 3 – 5

- Remove the (15) M4 x 12 screws of the compressive springs (16) and use pliers to pull off the overheating (17) and temperature sensor (18).

Note: Do not pull out the overheating (17) and temperature sensor (18) from the holder by pulling on the connection cable, always use pliers to remove them.

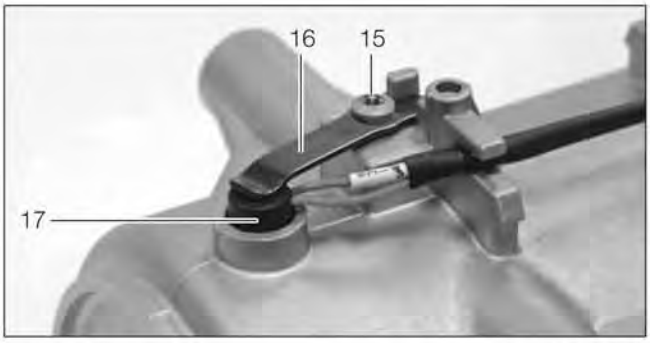

15 M4 x 12 screw
16 Compression spring
17 Overheating sensor

Figure 4

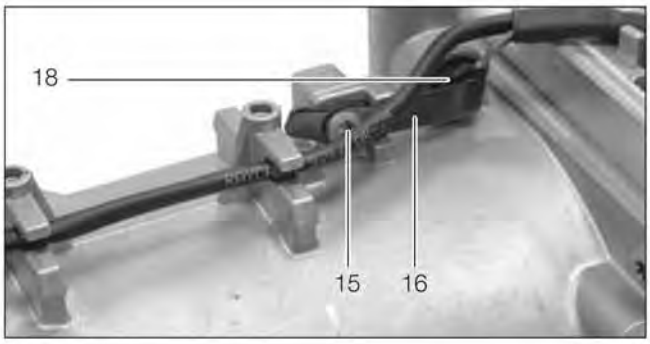

15 M4 x 12 screw

Figure 3

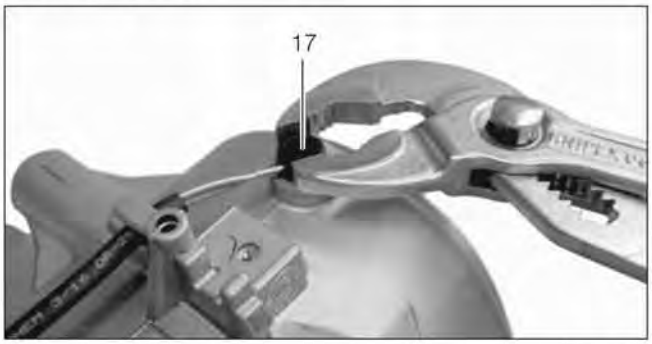

17 Overheating sensor

Figure 5

Repair step 1

Dismantle control box/blower unit and jacket

Remove water pump connector

Figure 6

- Disconnect the connector (24) at the water pump (26) and pull the cable loom out of the holder.

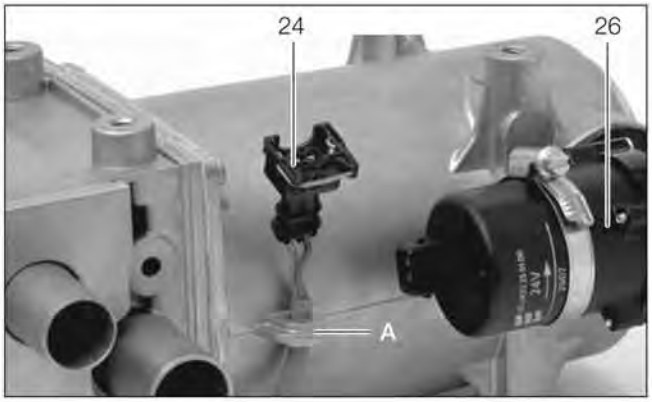

A Holder for cable loom
24 Water pump connector
26 Water pump

Figure 6

Remove side cover and dismantle jacket

Figure 7

- Pull out side cover (3) from above.
- Undo the 4 screws (21) M5 x 25 in the jacket (20) and remove the jacket from the control box / blower unit.

Note: The control box / blower unit may not be placed on the exposed impeller.

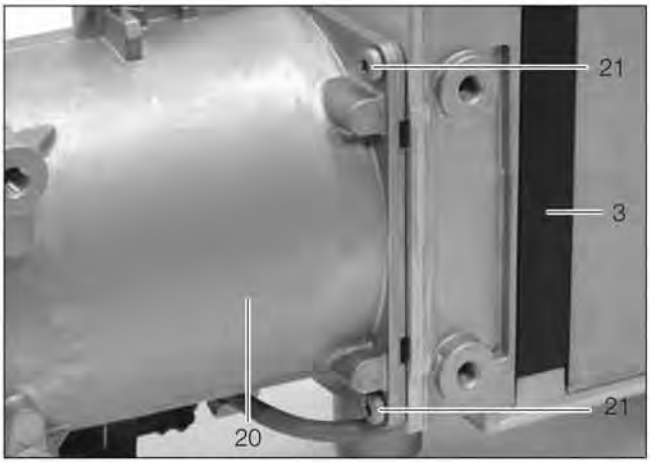

3 Cover, side
20 Jacket
21 M5 x 25 screw (4 screws)

Figure 7

Remove electric motor cover

Figure 8

- Undo the 2 screws (14) M5 x 16 of the electric motor cover (13) and remove the cover.

Note: The control box / blower unit may not be placed on the exposed impeller.

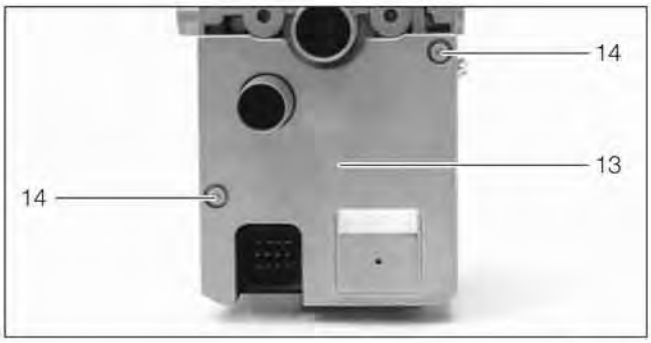

13 Electric motor cover
14 M5 x 16 screw

Figure 8

Repair step 1

Dismantle control box/blower unit and jacket

Disconnect 14-pin connector at control box and release cables

Figure 9 – 11 / Sketch 1

- Use side cutters to open the cable tie (12).
- Disconnect the 14-pin connector (29).
- Use the terminal removal tool to remove pins in the 14-pin connector (29) for the electric motor, flame sensor (11), glow plug 1(5) and glow plug 2 (6).
- Expose the cables of the two glow plugs from above (cable duct).

Note: When replacing the control box / blower unit, the Temp / Overheat sensor and water pump lead harnesses can be left in the 14-pin connector (29).

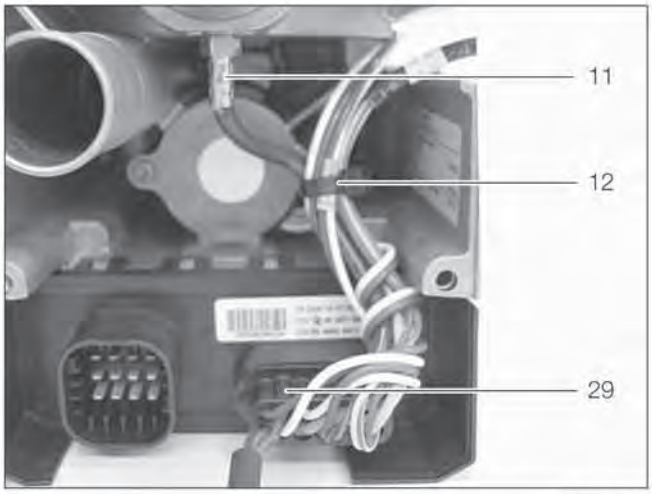

11 Flame sensor
12 Cable tie
12 14-pin connector

Figure 9

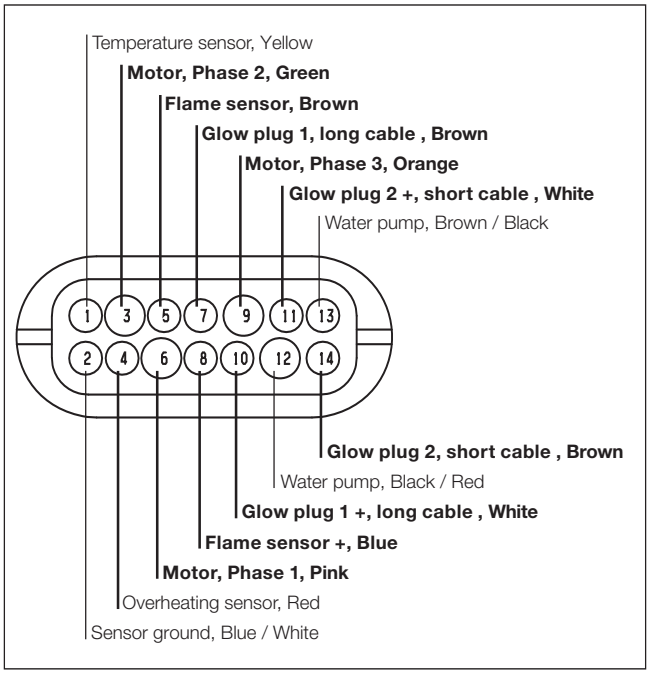

Sketch 1

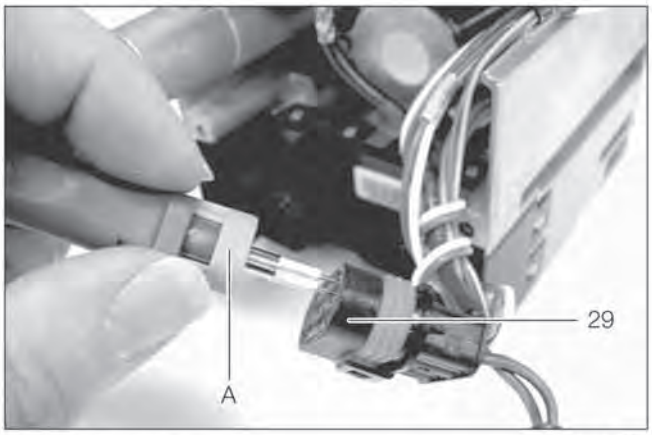

A AMP release tool
29 14-pin connector

Figure 10

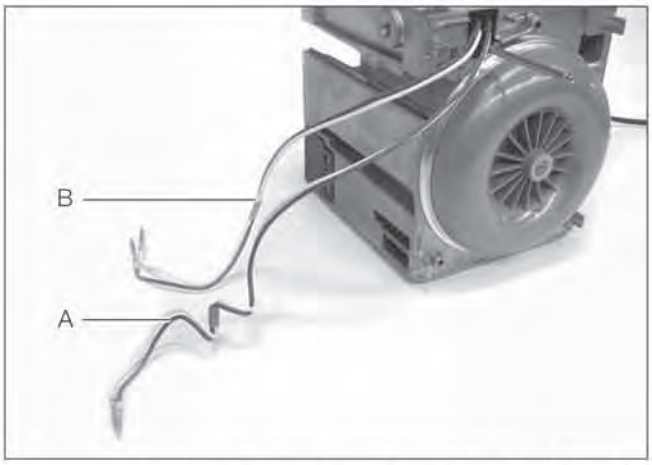

A Long wire (brown, white)
B Short wire (brown, white)

Figure 11

Repair step 1

Control box / blower unit and jacket

Remove flame sensor

Figure 12

- Unscrew the flame sensor (11) from the housing of the control box / blower unit.

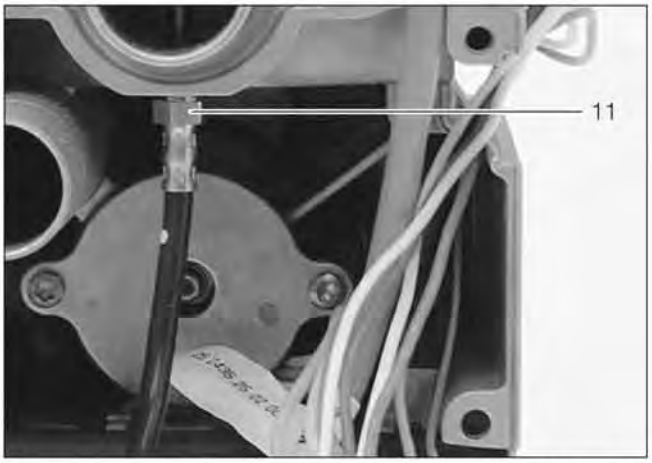

11 Flame sensor

Figure 12

Dismantle combustion chamber

Figure 13 and 14

- Undo the 3 screws (9) M5 x 16 of the combustion chamber (8).
- Lift the combustion chamber (8) with the fuel pipe until the grommet (22) is exposed, then remove the combustion chamber.
- Remove combustion chamber seal (23).

Note: Remove combustion chamber seal (23) without leaving residues. Always check the glow plugs during this repair step, see repair step 3.

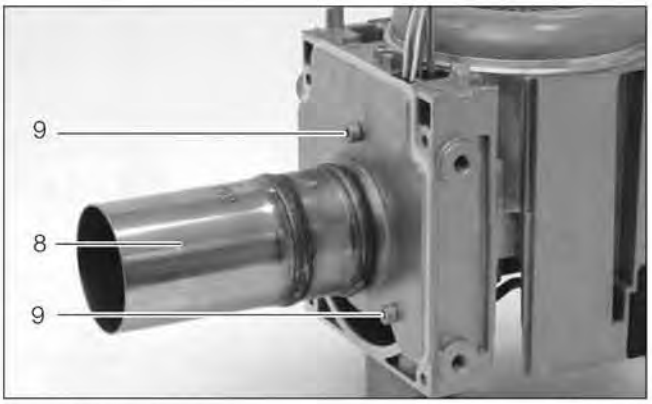

8 Combustion chamber
9 M5 x 16 screw (3 screws)

Figure 13

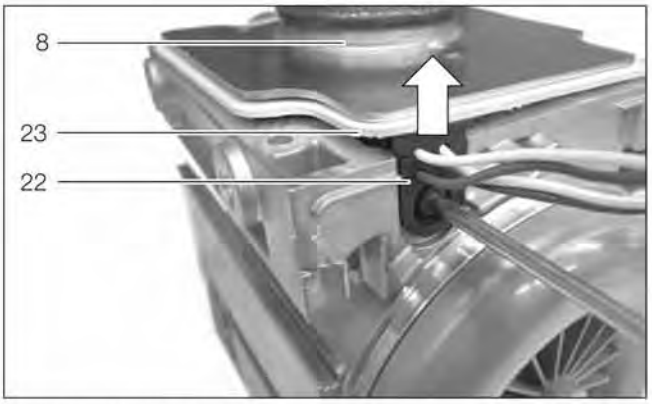

8 Combustion chamber
22 Grommet
23 Combustion chamber seal

Figure 14

Repair step 2

Assemble the control box/blower unit and jacket

Install combustion chamber seal

Figure 15 and 16

- Carefully guide the combustion chamber seal (23) over the cables of the glow plugs and over the fuel pipes and position on the combustion chamber (8).

Note: Take care when installing the new combustion chamber seal (23) as there is a risk of breaking it.

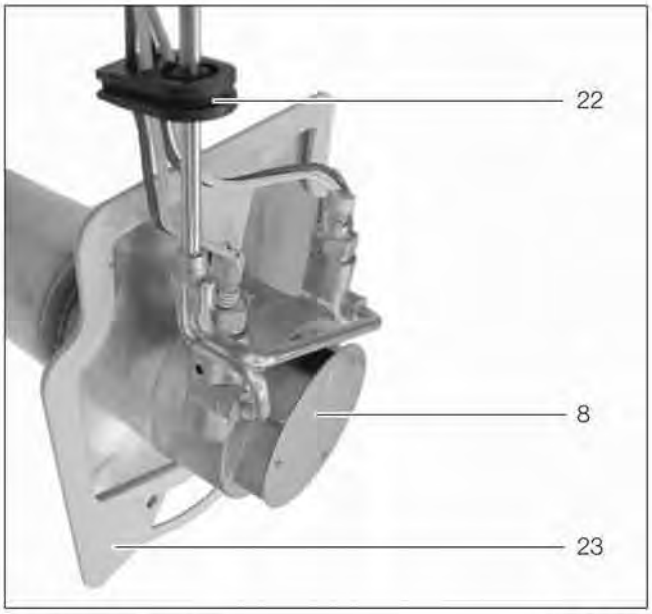

8 Combustion chamber
22 Grommet
23 Combustion chamber seal

Figure 15

Install grommet

Figure 16 and 17

- Carefully position the grommet (22) on the combustion chamber seal (23).

Note: Ensure the grommet is installed in the correct position, see Figure 17.

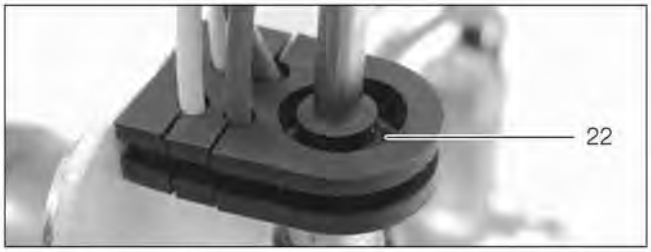

22 Grommet, correct position
The large opening of the grommet at the fuel tube must be visible from above

Figure 17

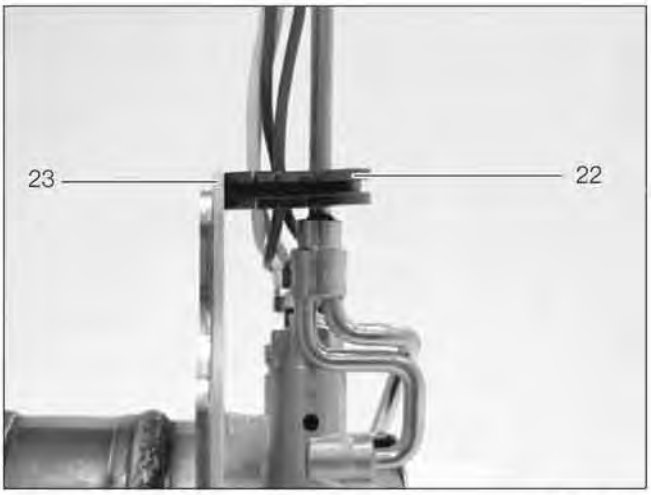

22 Grommet
23 Combustion chamber seal

Figure 16

Insert combustion chamber

Figure 18

- First insert the combustion chamber (8) with the grommet (22) into the control box / blower unit (10). If the grommet (22) has been completely inserted, align the combustion chamber and combustion chamber seal with the control box / blower unit (10).

22 Grommet
23 Combustion chamber seal

Figure 18

Repair step 2

Assemble the control box/blower unit and jacket

Install combustion chamber

Figure 19

- Use 3 screws (9) M5 x 16 to fix the combustion chamber (8).

Tightening torque M5 x 16 screw.

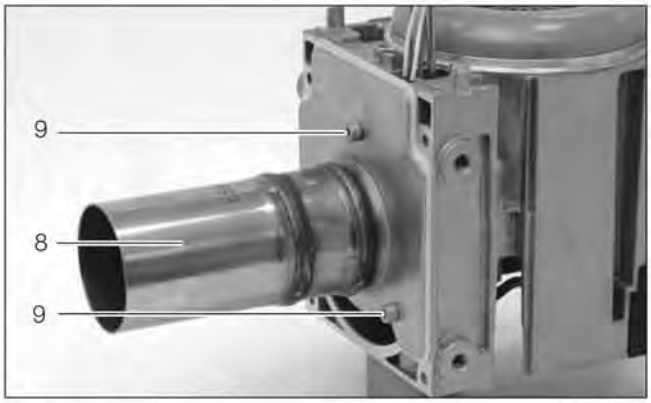

8 Combustion chamber
9 M5 x 16 screw (3 screws)

Figure 19

Lay sensor lead harness and leads of the glow plugs

Figure 20 and 21

- First lay the sensor lead harness (19) in the side cable duct, then lay the 4 leads of glow plugs 1 (5) and 2 (6) in the cable duct.
  Lay the sensor lead harness (19) and the glow plug leads to the 14-pin connector (29 - shown in page 33).
- Position the side cover (3) on the middle of the control box / blower unit (10) and push into the cable duct guide.

Note: It is imperative to keep to the correct laying order for the sensor lead harness (19) and the glow plug leads. The glow plug leads may not be laid underneath the sensor lead harness (19).
The sensor lead harness (19) must be laid in the area of the fuel pipe as shown in Figure 20.
The side cover (3) is conical at the bottom to simplify installation.

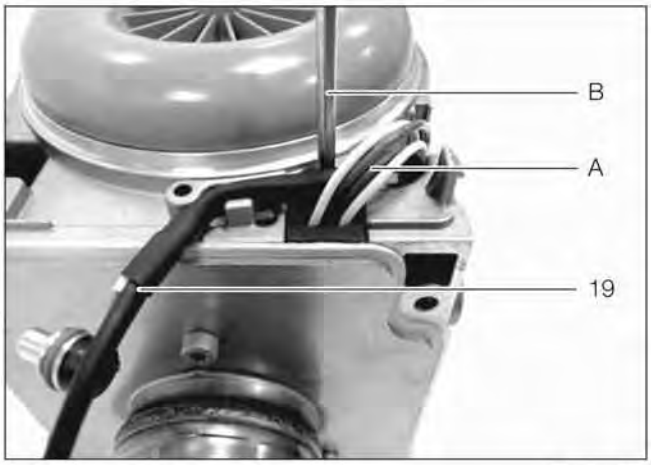

A Leads of the glow plugs 1 (5) and 2 (6)
B Fuel pipe
19 Sensor cable loom

Figure 20

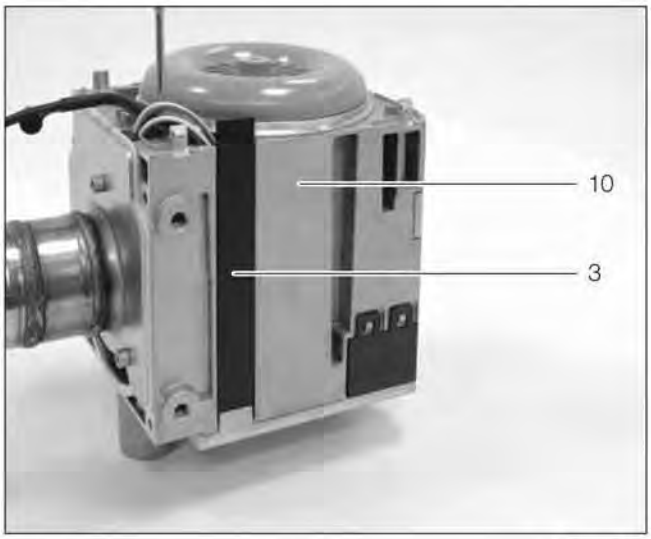

3 Cover, side

Figure 21

Repair step 2

Assemble the control box/blower unit and jacket

Install flame sensor

Figure 22

- Screw the flame sensor (11) into the housing of the control box / blower unit.
  Flame sensor tightening torque.

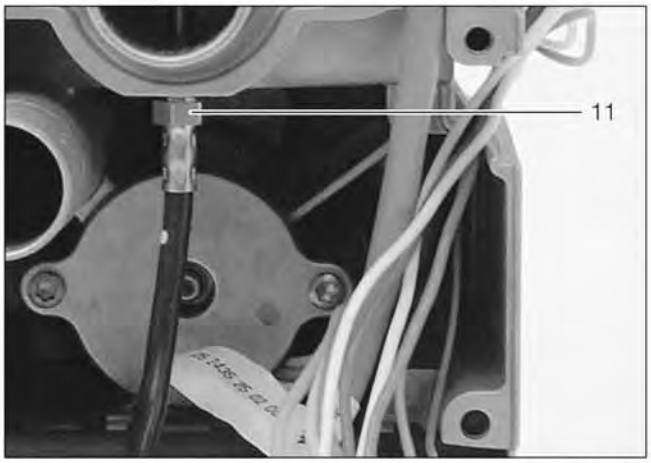

11 Flame sensor — Figure 22

Connect flame sensor lead harness and electric motor leads

Figure 23 / Sketch 2

• Latch the flame sensor lead harness (11) and the three leads of the electric motor into position in the 14-pin connector (29)

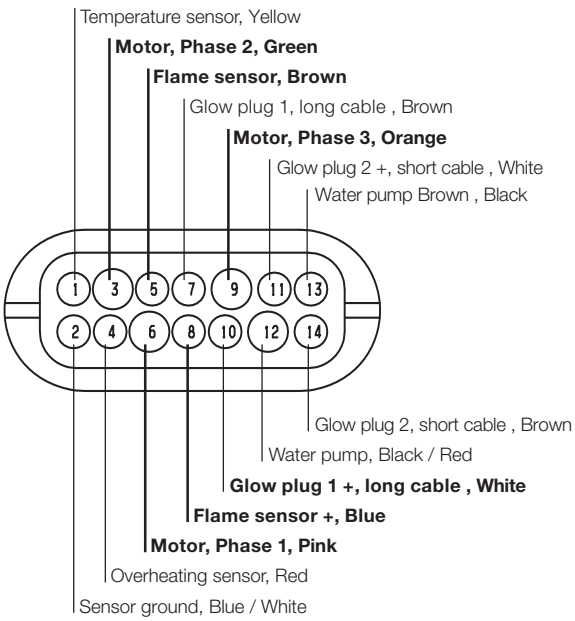

Sketch 2

29 14-pin connector — Figure 23

Note:
- The leads may not lay against the housing.
- Always lay the Brown / White (long) leads of glow plug 1 (5) last and latch into position in the 14-pin connector (29).

Repair step 2

Assemble control box/blower unit and jacket

Connect the glow plug leads

Figure 24, 25 and Sketch 3

- First, latch the leads of glow plug 2 (6 / short leads) into position in the 14-pin connector (29).
  Then wind the leads of glow plug 1 (5) 2 x around the leads already latched into position in the 14-pin connector and then latch into position in the 14-pin connector (29).
  Use a cable tie (12) to bundle all leads above the winding. Connect the 14-pin connector (29) to the control box / blower unit.

5 Long cable, glow plug 1
29 14-pin connector

Figure 24

5 Long cable, glow plug 1
12 Cable tie (use side cutters to shorten surplus tie length)

Figure 25

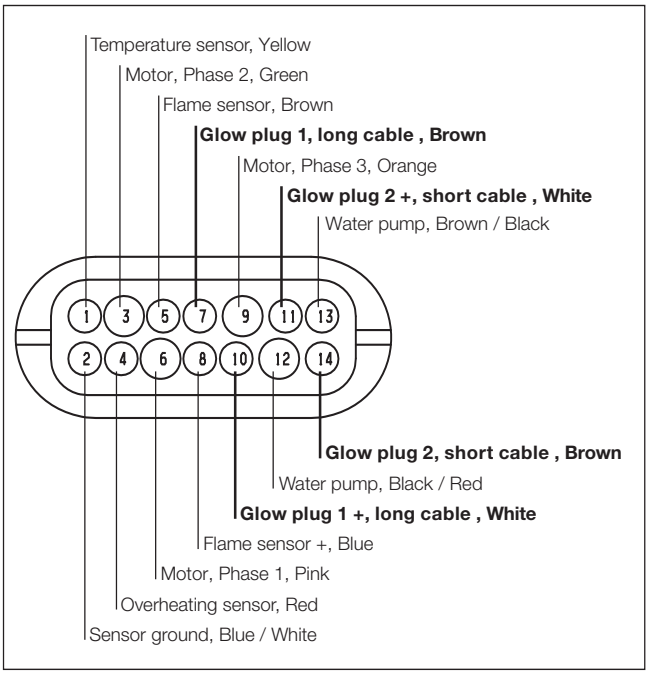

Sketch 3

Note:
- The leads may not lay against the housing.
- Check the glow plugs before completely assembling the heater. For check values, see fault code 020 / 021.

Repair step 2

Assemble control box/blower unit and jacket

Install electric motor cover

Figure 26 and 27

- Position the electric motor cover (13) on the housing of the control box / blower unit, at the same time, insert the water pump lead harness in the groove provided in the cover.
- Use 2 screws (14) M5 x 16 to fasten the electric motor cover (13) onto the housing of the control box / blower unit.

.

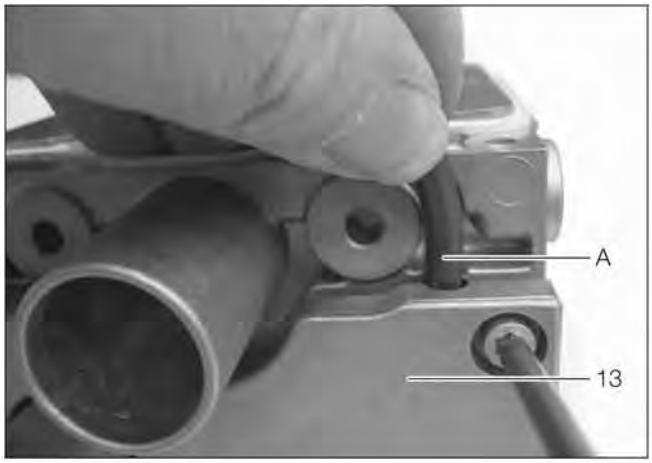

A Water pump lead harness
13 Electric motor cover

Figure 26

Assemble control box / blower unit and jacket

Figure 28

Position the heat exchanger on the control box / blower unit and fasten with 4 screws (21) M5 x 25.

Note: Tighten the 4 screws (21) M5 x 25 cross-wise (i.e. tighten diagonally opposite screws).

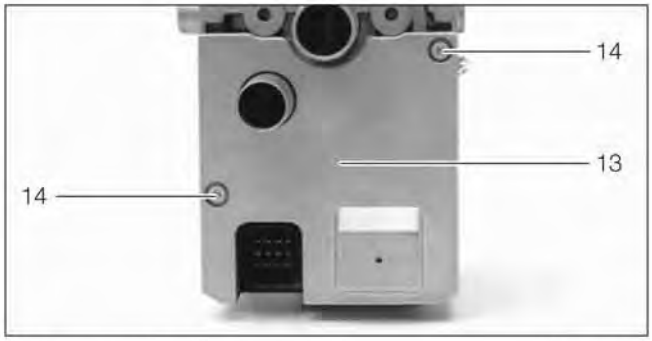

13 Electric motor cover
14 M5 x 16 screw

Figure 27

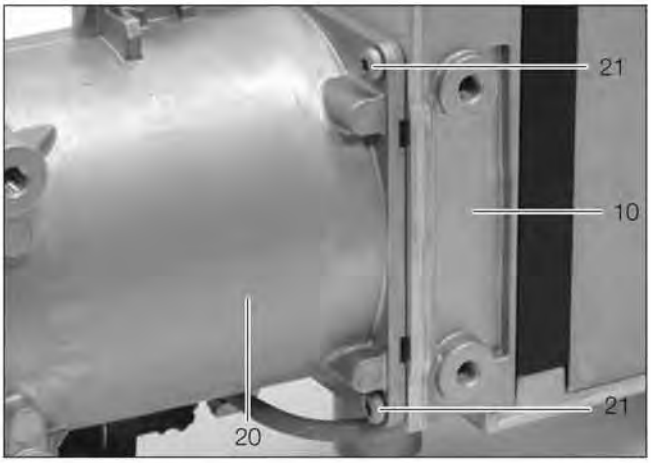

10 Control box / blower unit
20 Jacket with heat exchanger
21 M5 x 25 screw (4 screws)

Figure 28

Repair step 2
Control box/blower unit and jacket

Lay water pump lead harness

Figure 29

- Insert the water pump lead harness into the holder on the jacket, lay up to the water pump and connect.

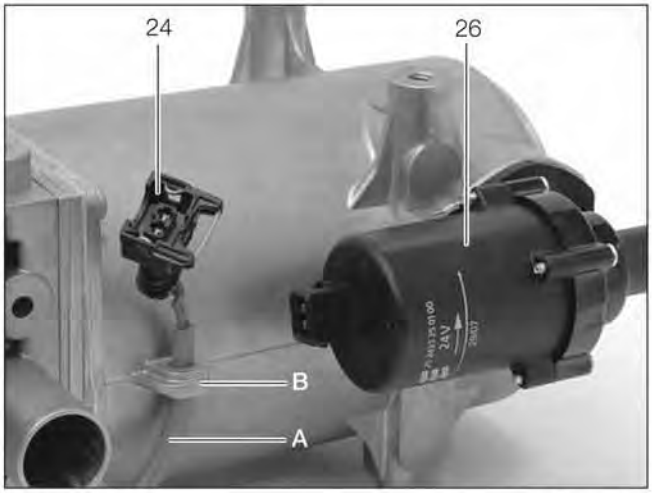

24 Water pump connector
26 Water pump
A Water pump cable harness loom
B Holder on jacket with heat exchanger

Figure 29

Install overheating and temperature sensor

Figure 30 and 31

- Insert the overheating (17) and temperature sensor (18) into the holders on the jacket.

  Insert the sensor cable loom (19) into the holders on the jacket.

  Use 2 screws (15) M4 x 12 to fasten both springs (16) on the overheating (17) and temperature sensor (18). (See page 31)

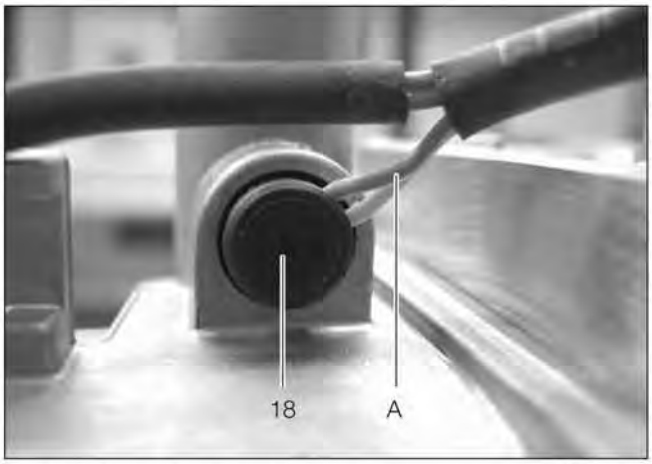

A Correct installed position and cable routing
18 Temperature sensor

Figure 30

Note: Insert the temperature sensor as shown in the figure to avoid pinching the cable loom.

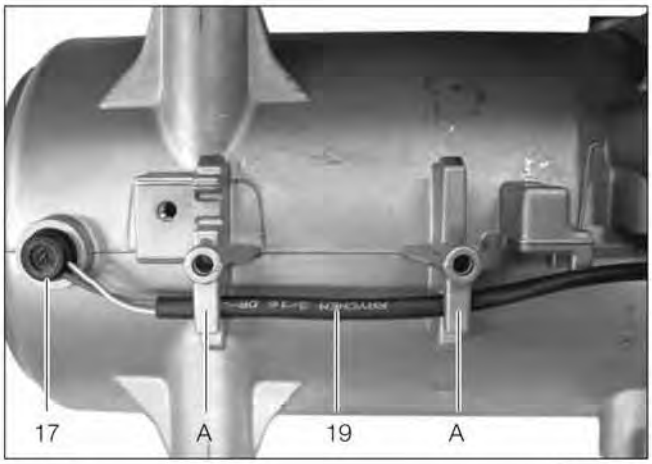

A Holder
17 Overheating sensor
19 Sensor cable loom

Figure 31

Repair step 2

Control box/blower unit and jacket

Install impeller cover

Figure 32

- Clamp the removed heater in a retaining device (vice) and position the new O-ring (2) on the control box / blower unit.
- Install the impeller cover; ensure that none of the leads of the sensor lead harness (19) get jammed. (See page 40)

2 O-Ring, positioned on the control box / blower unit Figure 32

Repair step 2
Control box/blower unit and jacket

Remove / check glow pin

Figure 33

- Carry out repair step 1.
- Unscrew glow pins 1 (5) and 2 (6) from the combustion cham ber housing (8) (See page 36), if necessary check the glow plugs; for check values see fault code 020 / 021.
- Visually check the glow pin socket lining, if necessary renew the glow pin lining.

Install glow pin

Figure 33

- Screw glow pin 1 (5) with long connection leads into the left-hand spark plug socket (2 fuel lines).
- Screw glow pin 2 (6) with short connection leads into the right-hand spark plug socket (1 fuel line).
- Assemble the heater according to repair step 2.

Characteristics of the glow pins

Glow pin 1 (5) long leads
- brown lead in Chamber 7
- white lead in Chamber 10

Glow pin 2 (6) short leads
- brown lead in Chamber 14
- wt lead in Chamber 11

  12 volt glow pin
- green band around the brown and white leads

  24 volt glow pin
- yellow band around the brown and white leads

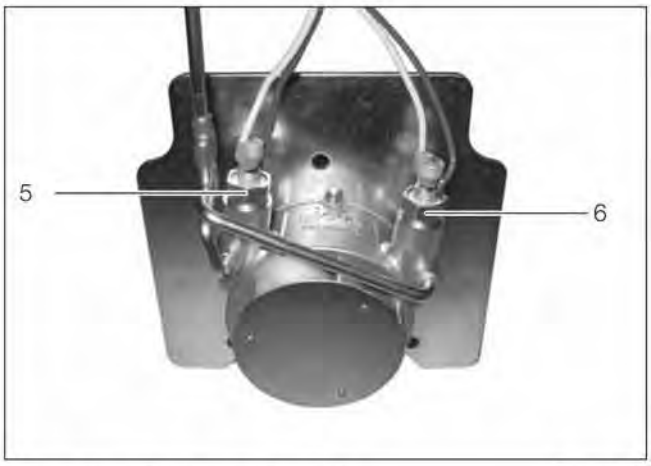

5 Glow pin 1 with long connection leads, installed in left-hand glow pin socket
6 Glow pin 2 with short connection leads, installed in right-hand glow pin socket

Figure 33

Clean ignition air drillholes

Figure 34

- Use a pointed object to clean the ignition air drillholes in the left-hand and right-hand spark plug sockets.

A Right-hand glow pin socket
B Pointed object for cleaning the ignition air drillhole.

Figure 34

Repair step 4

Remove glow pin socket lining

Figure 35

- Carry out repair step 1.
- Unscrew glow pin from the combustion chamber housing (8).
- Use a pointed object to pull the glow pin socket lining out of the glow pin socket.

A Pointed object for pulling out the lining
7 Glow pin socket lining

Figure 35

Install glow pin socket lining

Figure 36, 36/1

- Insert the glow pin socket linings, with the bevelled edge facing upwards, into the spark plug sockets up to the limit stop.

Note: Ensure the ignition air drillhole in the glow pin socket is not concealed by the spark plug socket lining.
- Assemble the heater according to repair step 2.

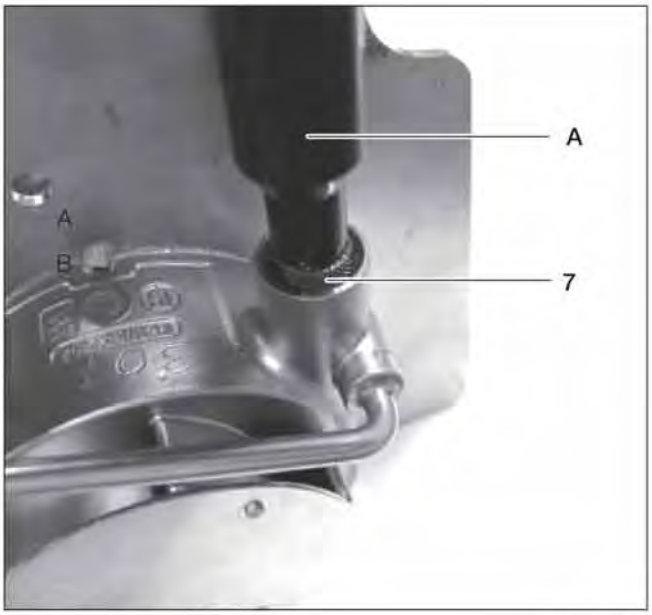

A Screen installation tool
7 Glow pin Screen

Figure 36

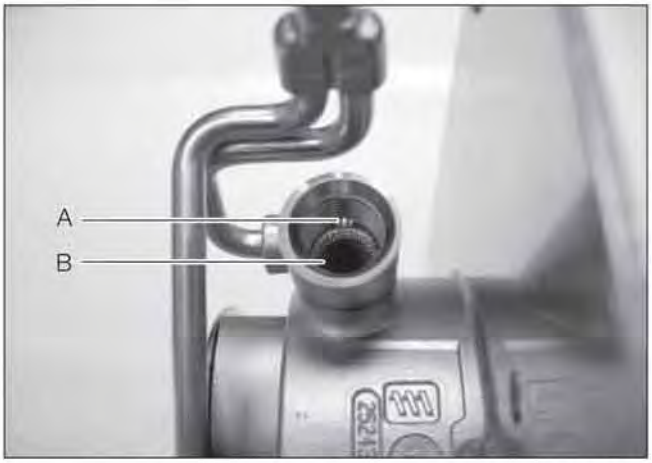

A Ignition air drillhole
B Glow pin socket with lining installed

Bild 36/1

Repair step 5

Check overheating and temperature sensor

Figure 37 / Diagram 1

- Removal of the overheating (17) and temperature sensor (18) is described in repair step 1.
- Use the digital multimeter to check the overheating (17) and temperature sensor (18).

  If the resistance value lies outside the table of values or the diagram, then replace the overheating (17) and temperature sensor (18).
- Installation of the overheating (17) and temperature sensor

  (18) is described in repair step 2.

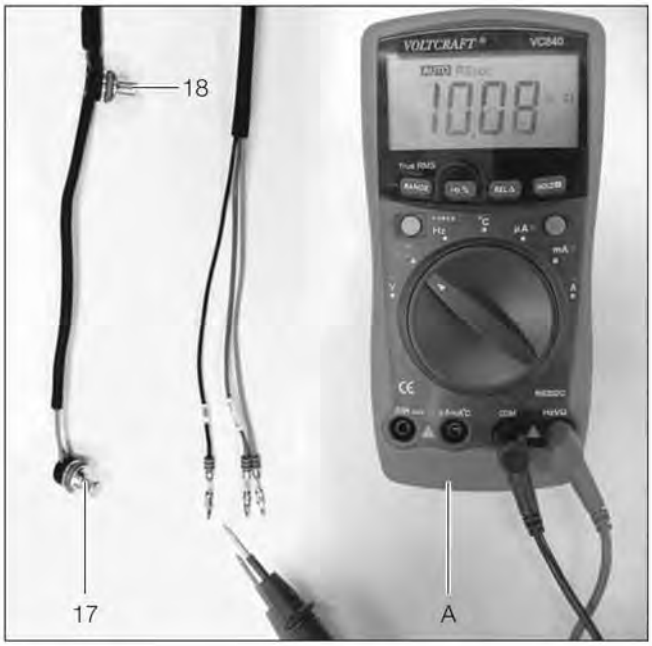

A Digital multimeter
17 Overheating sensor
18 Temperature sensor

Figure 37

Table of values

Temp[°C]	0	25	40	60	80	100	120
Temp[°F]	32	77	104	140	176	212	248
R_{NTC} [kΩ]	32.55	10	5.33	2.49	1.26	0.677	0.389

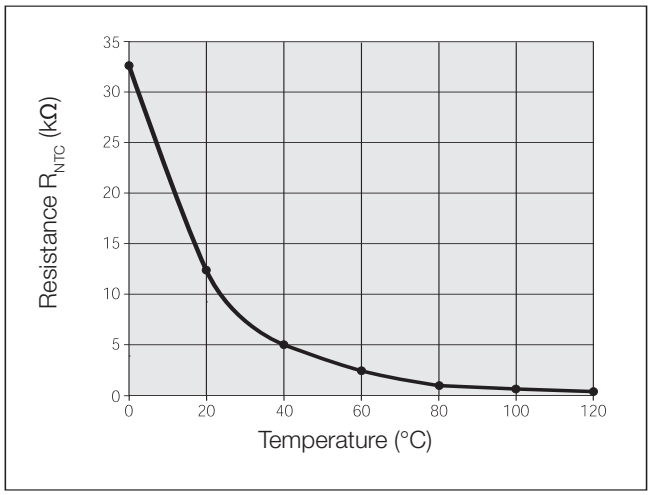

Repair step 6

Check flame sensor

Figure 38 / Diagram 2

- Removal of the flame sensor (11) is described in repair step 1.
- Use the digital multimeter to check the flame sensor (11). If the resistance value lies outside the table of values or the diagram, then replace the flame sensor (11).
- Installation of the flame sensor (11) is described in repair step 2.

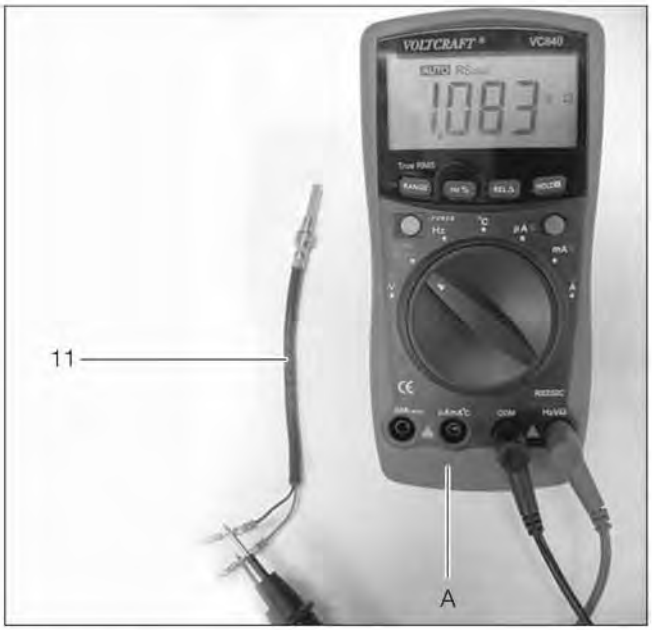

A Digital multimeter
11 Flame sensor

Figure 38

Table of values

Temp[°C]	-50	0	50	100	150	200	250	300	350	400
Temp[°F]	-58	32	122	212	302	392	482	572	662	752
R [Ω]	803	1000	1194	1385	1573	1758	1941	2120	2297	2470

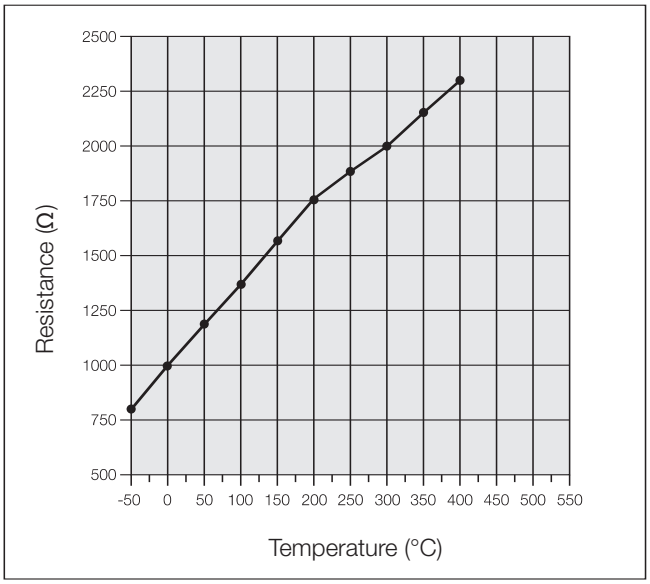

Diagram 2

Repair step 7

Remove / attach water pump

Figure 39

- Disconnect the connector (24) at the water pump (26).
- Undo the hose clip (25)
- Remove the water pump.
- Check O-ring (See page 50 parts diagram #13), replace if necessary
- Install in the reverse order.

Note: When assembling the O-ring coat it with lubricant.

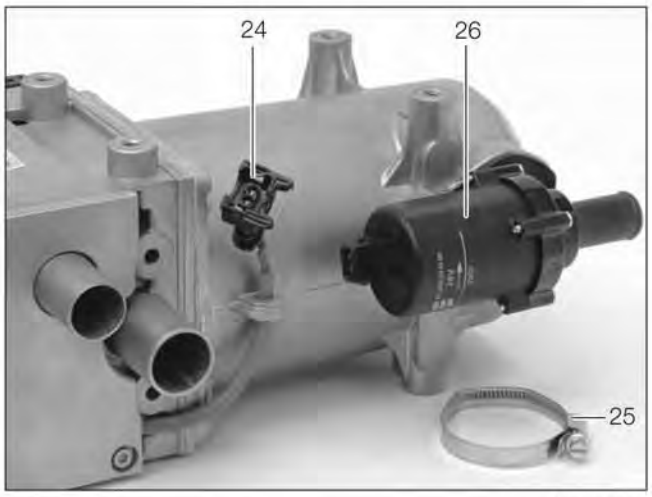

24 Water pump connector
25 Hose clip
26 Water pump

Figure 39

Measuring the fuel quantity

Preparing for the measurement

(Sketch 4)

- Disconnect the fuel pressure line at the heater and place the end in a measuring cylinder (size 25 ml).
- Switch on the heater, if the fuel discharges uniformly and free of bubbles, the fuel pipe is filled and vented.
- Switch off heater and empty measuring cylinder.

Measurement

- Switch on heater and wait until the metering pump stars pumping the fuel.
- During the measurement, hold the measuring cylinder at the level of the heater.

  After 68 sec. the pumping of the fuel is automatically switched off.
- Switch off heater, as otherwise it will start up again.
- Read off the quantity of fuel in the measuring cylinder.

Evaluation

Compare the measured quantity of fuel with the values in the following table.

If the measured quantity of fuel is above the maximum value or below the minimum value, the metering pump must be replaced.

Heater	**Quantity of fuel**		
	Desired	Maximum	Minimum
HYDRONIC M8 Diesel / FAME	5.7 ml/ 68 sec	6.27 ml/ 68 sec	5.13 ml/ 68 sec
HYDRONIC M10 Diesel	7.5 ml/ 68 sec	8.25 ml/ 68 sec	6.75 ml/ 68 sec
HYDRONIC M12 Diesel	7.5 ml/ 68 sec	8.25 ml/ 68 sec	6.75 ml/ 68 sec

Note: Only carry out the fuel measurement if the battery is sufficiently charged. During the measurement the volt age applied to the control box should be at least 11 volt or 23 volt and max.
13 volt or 25 volt.

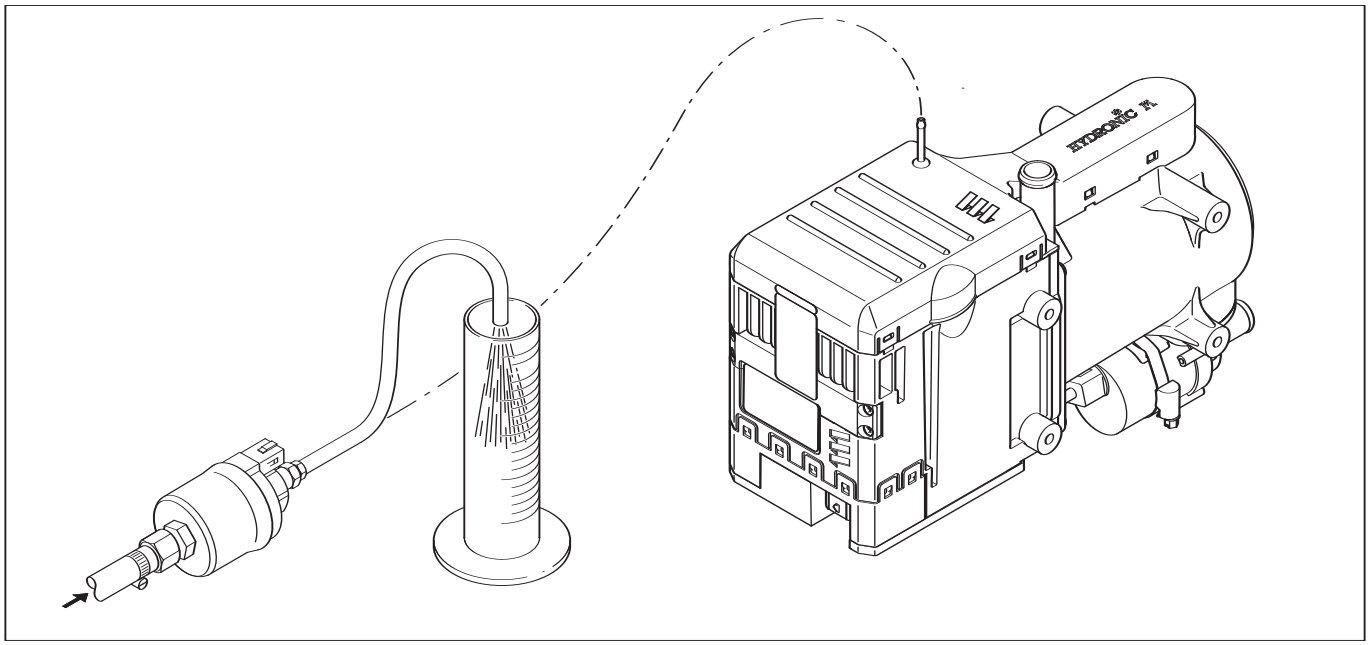

Sketch 4

Hydronic M-II Parts Diagram

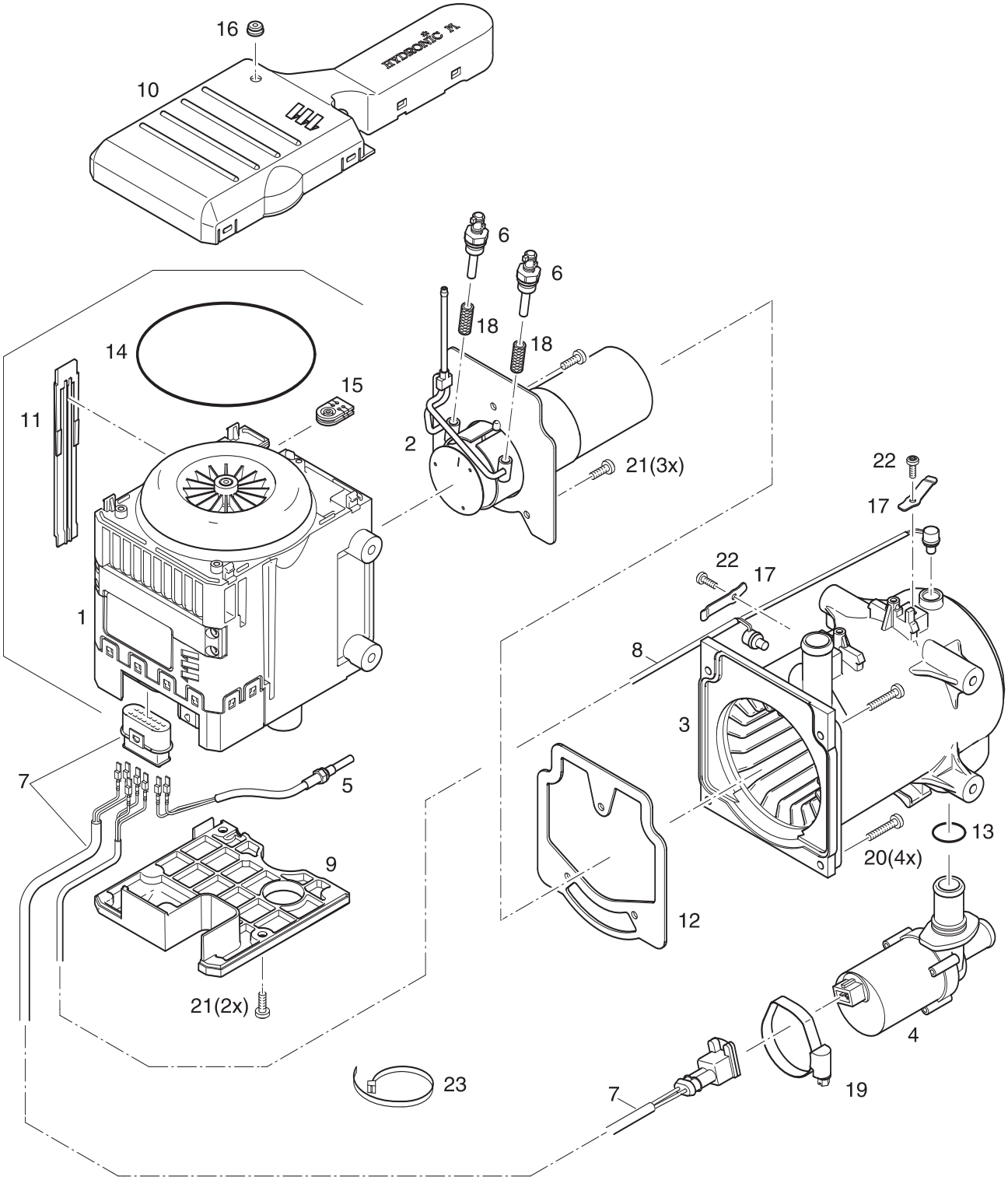

Hydronic M-II - 12 & 24 volt - Diesel & Gasoline versions

Description & Part #'s

Ref. No.	Description		Part Number	Model # 25 2470 05 12V	25 2471 05 24V	25 2434 05 12V	25 2435 05 24V	25 2472 05 12V	25 2473 05 24V
1	Combustion air blower/ECU	12 V	25 2470 99 15 00	•					
		24 V	25 2471 99 15 00		•				
		12 V	25 2434 99 15 00			•			
		24 V	25 2435 99 15 00				•		
		12 V	25 2472 99 15 00					•	
		24 V	25 2473 99 15 00						•
2	Burner assembly		25 2435 99 11 00	•	•	•	•	•	•
3	Casing		25 2435 99 01 02	•	•	•	•	•	•
4	Water pump	12 V	25 2434 99 25 01	•		•		•	
		24 V	25 2435 99 25 01		•		•		•
5	Flame sensor		25 1920 35 01 00	•	•	•	•	•	•
6	Glow pin	12 V	25 2434 01 01 00	•		•		•	
		24 V	25 2435 01 01 00		•		•		•
7	Water pump harness		25 2435 25 02 00	•	•	•	•	•	•
8	Temperature overheat sensor		25 2435 40 01 00	•	•	•	•	•	•
9	Bottom cover blower housing		25 2435 01 00 02	•	•	•	•	•	•
10	Cover		25 2435 99 01 03	•	•	•	•	•	•
11	Cover blower housing channel		25 2435 01 00 04	•	•	•	•	•	•
12	Seal for combustion chamber		25 2435 01 00 10	•	•	•	•	•	•
13	Water pump O-Ring	19,8 x 2,3	22 1000 70 00 17	•	•	•	•	•	•
14	Blower O-Ring	117,07 x 3,53	22 1000 70 00 15	•	•	•	•	•	•
15	Fuel pipe grommet		25 2435 01 01 04	•	•	•	•	•	•
16	Fuel pipe sleeve		20 1752 01 00 02	•	•	•	•	•	•
17	Spring clip		25 2281 01 00 09	•	•	•	•	•	•
18	Screen for glow pin		25 2069 10 01 02	•	•	•	•	•	•
19	Hose clip	35 – 55	152 61 004	•	•	•	•	•	•
20	Taptite screw	M 5 x 25	109 10 152	•	•	•	•	•	•
21	Taptite screw	M 5 x 16	109 10 151	•	•	•	•	•	•
22	Taptite screw	M 4 x 12	5590010	•	•	•	•	•	•
23	Cable tie		5590147	•	•	•	•	•	•

Hydronic M Parts Diagram

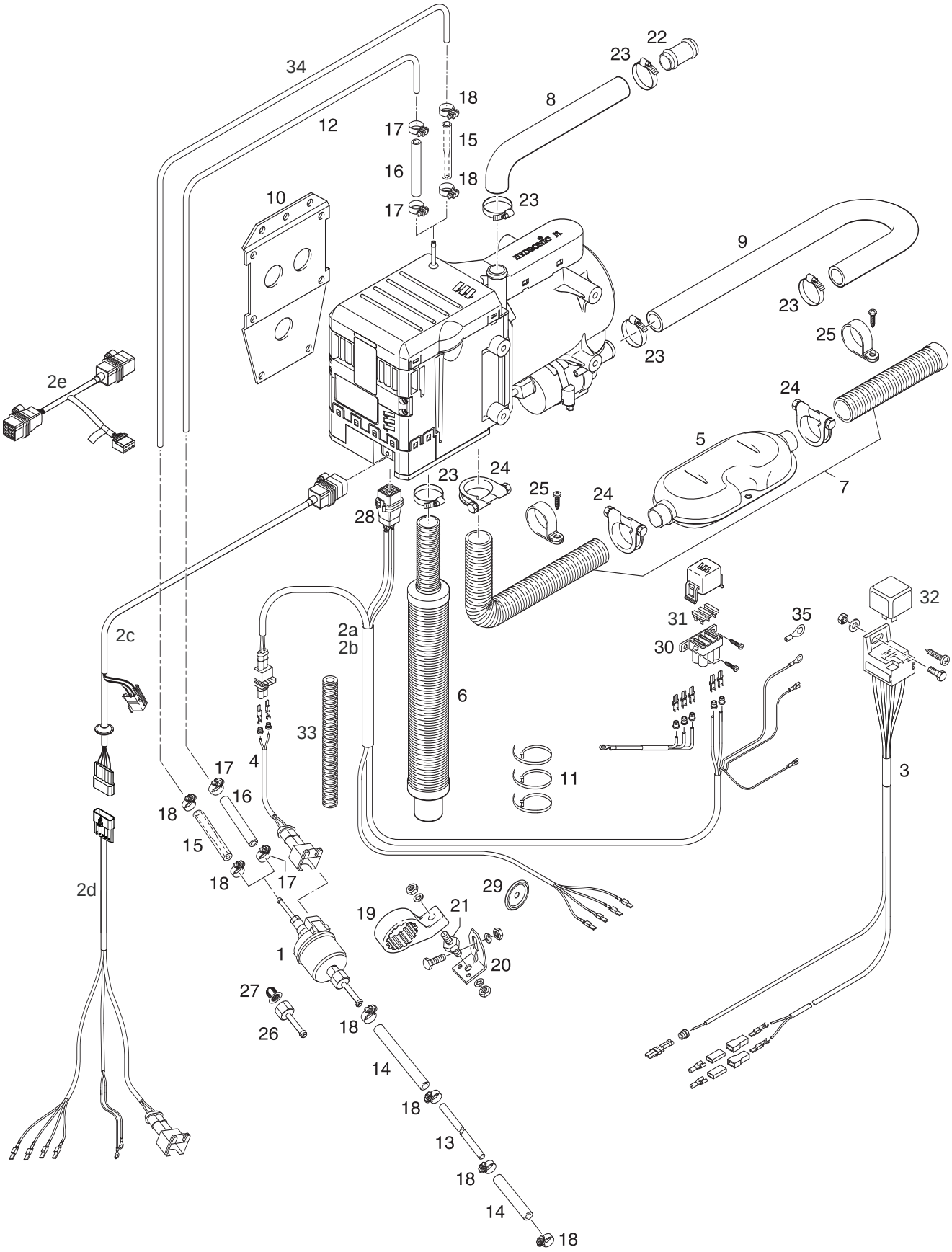

Hydronic M-II - 12 & 24 volt - Diesel & Gasoline versions

Description & Part #'s

Ref. No.	Description		Part Number	Model #	25 2470 05 12V	25 2471 05 24V	25 2434 05 12V	25 2435 05 24V	25 2472 05 12V	25 2473 05 24V
1	Fuel metering pump	12 V	22 4617 01 00 00		•		•		•	
		24 V	22 4618 01 00 00			•		•		•
2a	Cable harness - (JE Harness)	ADR	25 2435 80 07 00		•	•	•	•	•	•
			25 2435 80 06 00			•		•		•
2b	Cable harness - Universal (No Relay)	12 V	25 2800 70 10 12		•		•		•	
		24 V	25 2800 70 10 24			•		•		•
2c	Boxed Adapter harness		25 2800 70 10 03		•	•	•	•	•	•
2d	Main box harness	12 V	25 2800 70 00 02		•		•		•	
		24 V	25 2800 70 00 04			•		•		•
2e	Diagnostic adapter		25 2800 70 10 04		•	•	•	•	•	•
3	Relay harness		22 1000 33 04 00		•	•	•	•	•	•
4	Cable harness		22 1000 33 02 00		•	•	•	•	•	•
5	Exhaust muffler		25 1806 80 01 00		•	•	•	•	•	•
6	Intake silencer		25 1786 80 02 00		•	•	•	•	•	•
7	Flex exhaust w/cap		25 1816 80 08 00		•	•	•	•	•	•
8	20mm 90° bend coolant hose		20 1673 80 00 01		•	•	•	•	•	•
9	20mm 180° bend coolant hose		20 1673 80 00 03		•	•	•	•	•	•
10	Heater bracket		25 1816 80 00 01		•	•	•	•	•	•
11	Cable tie 12"		5590147		•	•	•	•	•	•
12	1.5 mm Plastic fuel line		890 31 118		•	•	•	•	•	•
13	5mm Fuel hose (biodiesel compatible)		360 75 401		•	•	•	•	•	•
14	Fuel hose 5x3mm		360 75 350		•	•	•	•	•	•
15	Fuel line adaptor 3.5 - 5mm		25 1888 80 01 02		•	•				
16	Fuel hose 3,5 x 3		360 75 300		•	•	•	•	•	•
17	9mm clamp		10 2068 00 90 98		•	•	•	•	•	•
18	11mm clamp		10 2068 01 10 98		•	•	•	•	•	•
19	Holder metering pump		22 1000 50 07 00		•	•	•	•	•	•
20	FMP angle bracket		20 1348 03 00 04		•	•	•	•	•	•
21	Metal rubber buffer		20 1185 00 00 01		•	•	•	•	•	•
22	Connection piece		20 1534 88 00 01		•	•	•	•	•	•
23	Clamp 20 - 32mm		10 2066 02 00 32		•	•	•	•	•	•
24	Flex exhaust clamp		152 09 003		•	•	•	•	•	•
25	Clamp "C" type		152 10 060		•	•	•	•	•	•
26	Hose connection piece				•	•	•	•	•	•
27	Integrated fuel filter		20 1312 00 00 06		•	•	•	•	•	•
28	Socket housing		22 1000 31 93 00		•	•		•	•	•
29	Grommet		20 1280 09 01 03		•	•	•	•	•	•
30	Fuse holder, receptacle housing kit		22 1000 31 06 00		•	•	•	•	•	•

Hydronic M-II - 12 & 24 volt - Diesel & Gasoline versions

Description & Part #'s

Ref. No.	Description		Part Number	Model # 25 2470 05 12V	25 2471 05 24V	25 2434 05 12V	25 2435 05 24V	25 2472 05 12V	25 2473 05 24V
31	Fuse	25 A	204 00 089	•	•	•	•	•	•
		15 A	204 00 003	•	•	•	•	•	•
		5 A	204 00 079	•	•	•	•	•	•
32	Relay	12 V	203 00 065	•		•		•	
		24 V	203 00 066		•		•		•
33	Convoluted tubing	1" X 17"	20 2900 70 90 16	•	•	•	•	•	•
		1/2" X 12"	20 2900 70 90 08	•	•	•	•	•	•
		3/8"	20 2900 70 90 13	•	•	•	•	•	•
		3/4"	5670380	•	•	•	•	•	•
		1"	20 2900 70 90 14	•	•	•	•	•	•
34	Plastic fuel line		890 31 101	•	•				
35	Ring Terminal	5/16"	5670196	•	•	•	•	•	•

1st Printing - Apr 2008
Printed in Canada
P/N: 20 2900 81 0102 0A

Espar Products, Inc.

(800) 387-4800

(905) 670-0960

www.espar.com

A member of the Worldwide **Eberspächer** Group of Companies