LINEA HEMO

Cod. 325-116-317-111P

PRODUCT DESCRIPTION

1. Hemo multi-purpose chairs, designed and created in collaboration with experts of the field, represent a reliable and essential piece of equipment for operations in various areas, such as: hemodialysis, peritoneal analysis, plasmapheresis, oncology, chemotherapy and rehabilitation.

5., 6. The back-rest, leg-rest, trendelenburg are adjusted mechanically. Up&Down height is adjustable by hydraulic cylinder or 4. electrical motor.

2. The sturdy and durable steel frame is fully galvanized against corrosion and protected from external agents by epoxy polyester paint and plastic cover.

16. The standard version is supplied with anatomic mattress, with latherette resistant to urine, fire, UV, mechanical damage, desinfectants, antimicrobic and antifungus.

A couple of guides, a couple of blood-sample taking arm-rests, a couple of fixed clamps, roll holder and padded foot-rest to offer the maximum comfort to patients.

19.1, 19.2, 19.3

„Hemo“ universalios kėdės, sukurtos bendradarbiaujant su šios srities ekspertais, yra patikima ir kokybi6ka įranga operacijoms įvairiose srityse, tokiose kaip: hemodializė, pilvaplėvės analizė, plazmaferezė, onkologija, chemoterapija ir reabilitacija.

Atlošas, kojų atrama, trendelenburg sureguliuojami mechaniškai. Aukštyn ir žemyn aukštį galima reguliuoti hidrauliniu cilindru arba elektriniu varikliu.

Tvirtas ir patvarus plieninis rėmas yra visiškai cinkuotas nuo korozijos ir apsaugotas nuo išorinių veiksnių epoksidiniais poliesterio dažais ir plastikine danga.

Standartinė versija tiekiama su anatominiu čiužiniu, kurio čiužinys yra atsparus šlapimui, ugniai, UV spinduliams, mechaniniams pažeidimams, dezinfekcinėms medžiagoms, antimikrobinis ir priešgrybelinis.

Pora bėgelių, pora ranktūrių kraujo paėmimui, pora fiksuojančių veržlių, popieriaus ritinėlių laikiklis ir reguliuojama kojų atrama, kad būtų maksimalus komfortas pacientams.

HEMO 2

Cod. 322

The covering is available in the following colours: **Bianco**/White **- Grigio**/Grey **- Nero**/Black

PRODUCT DESCRIPTION

Hydraulically adjustable height by pedal
Adjustable height head section 8.
Adjustable length feet section 7.
360 degree rotation 9.

NORME CE / NORME CE

Hemo 2 è a norme ce, ed è fabbricato in conformità alle seguenti normative: Dir 98/37/CEE e DPR 459, DIR 93/42/CEE, D.L. 46, CEI EN 60204-1, UNI EN 292/294, DIR 99/44/CEE.

Hemo 2 is ce confirmed and is manufactured in conformity with the requirements of Dir 98/37/CEE and DPR 459, DIR 93/42/CEE, D.L. 46, CEI EN 60204-1, UNI EN 292/294, DIR 99/44/CEE.

Hidrauliškai reguliuojamas aukštis pedalu

Reguliuojamas galvos aukštis

Reguliuojamo ilgio pėdų dalis

360 laipsnių pasukimas

Caratteristiche imballo / Packaging details

Dimensioni imballo / Packaging size **170 x 74 x 86h cm**
Volume/ Volume **1,081m³**

18.

Hemo 2	MAXIMUM CAPACITY PORTATA MASSIMA 200 kg	**Peso netto** / Net weight **66 kg**
Hemo 3		**Peso netto** / Net weight **71 kg**
Hemo 4		**Peso netto** / Net weight **73 kg**
Hemo Syncro		**Peso netto** / Net weight **70 kg**

TABELLA DIMENSIONALE [cm] / TABLE OF DIMENSIONS [cm]

Hemo 3, Hemo 4, Hemo Syncro **h min 62 cm** **h max 92 cm** 12.
Hemo 2

10.

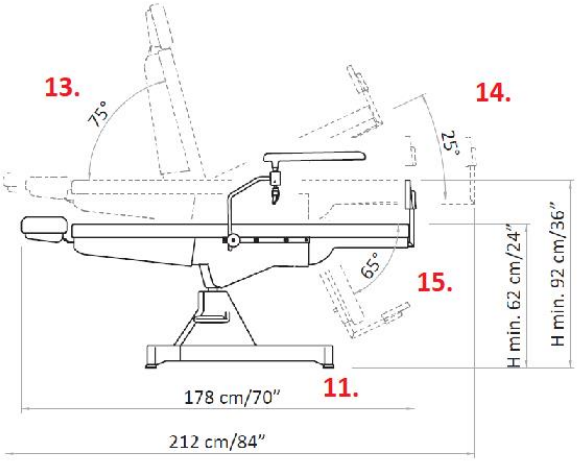

Accessori su richiesta / Accessories upon request

Ruote **cod.119**
Wheels

Coppia guide sulla schiena **cod.317**
Couple of guides on the back-rest

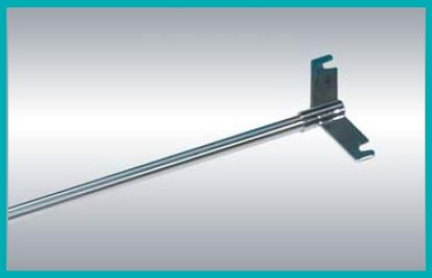

Asta porta flebo **cod.311**
I.V. rod

Coppia morsetti girevoli **cod.320**
Rotating clamp couple

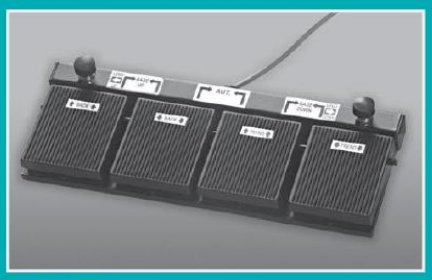

Pedale **cod.116**
Foot pedal control

Solo per / Only for **Hemo 4**

Pulsantiera **cod.117**
Hand set control

Solo per / Only for **Hemo Syncro**

Il costruttore si riserva il diritto di effettuare modifiche alle immagini e alle descrizioni di questo catalogo in ogni momento per esigenze di carattere tecnico o commerciale. - The manufacturer firm reserves the right to effect changes to the images and descriptions of this catalogue at any time for commercial or technical purpose. Cat.18 - rev.0-11/04

certificato n°50 100 4433

Brusaferri & C S.r.l. Strada Provinciale 6, 26011 Casalbuttano, CR, Italy Tel. +39 0374.363069/68 Fax +39 0374.363071 www.lemi.it info@lemi.it