eppendorf

Register your instrument!
www.eppendorf.com/myeppendorf

Centrifuge 5425 R

Operating Manual

Copyright ©2021 All rights reserved, including graphics and images. No part of this publication may be reproduced without the prior permission of the copyright owner.

Microtainer® is a registered trademark of Becton Dickinson, USA.

Eppendorf® and the Eppendorf Brand Design are registered trademarks of Eppendorf SE, Germany.

Eppendorf VisioNize® is a registered trademark of Eppendorf SE, Germany.

Registered trademarks and protected trademarks are not marked in all cases with ® or ™ in this manual.

U.S. Patents are listed on www.eppendorf.com/ip

5406 900 039-01/062021

Table of contents

1 Operating instructions . . . 7
1.1 Using this manual . . . 7
1.2 Danger symbols and danger levels . . . 7
1.2.1 Danger symbols . . . 7
1.2.2 Danger levels . . . 7
1.3 Symbols used . . . 8
1.4 Abbreviations used . . . 8

2 Safety . . . 9
2.1 Intended use . . . 9
2.2 User profile . . . 9
2.3 Application limits . . . 9
2.4 Warnings for intended use . . . 10
2.4.1 Personal injury or damage to device . . . 10
2.4.2 Incorrect handling of the centrifuge . . . 12
2.4.3 Incorrect handling of the rotors . . . 12
2.4.4 Extreme strain on the centrifugation tubes . . . 13
2.5 Safety instructions on the device . . . 14
2.6 Obligation to report accidental damage or damage to the device . . . 15
2.6.1 Manufacturer Eppendorf SE . . . 15
2.6.2 Local Eppendorf distributor . . . 15

3 Product description . . . 17
3.1 Product overview . . . 17
3.2 Delivery package . . . 18
3.3 Features . . . 18
3.4 Name plate . . . 19

4 Installation . . . 21
4.1 Selecting the location . . . 21
4.2 Preparing installation . . . 22
4.3 Installing the instrument . . . 23

5 Operation . . . 25
5.1 Operating controls . . . 25
5.2 Navigating in the menu . . . 27
5.3 Menu structure . . . 28
5.4 Preparing for centrifugation . . . 29
5.4.1 Switching on the centrifuge . . . 29
5.4.2 Removing the rotor . . . 29
5.4.3 Inserting the rotor . . . 29
5.4.4 Triggering rotor detection . . . 29
5.4.5 Loading the rotor . . . 30
5.4.6 Closing the centrifuge lid . . . 32
5.4.7 Closing the QuickLock rotor lid . . . 32

5.5 Cooling . . . 33
5.5.1 Temperature adjustment . . . 33
5.5.2 Temperature display . . . 33
5.5.3 Temperature monitoring . . . 33
5.5.4 FastTemp . . . 33
5.5.5 Continuous cooling . . . 34
5.6 Centrifugation . . . 34
5.6.1 Centrifugation with time setting . . . 35
5.6.2 Centrifugation in continuous operation . . . 35
5.6.3 Short spin centrifugation . . . 36
5.7 Information on aerosol-tight centrifugation . . . 37
5.7.1 Aerosol-tight centrifugation in a fixed-angle rotor . . . 37

6 Maintenance . . . 39
6.1 Service options . . . 39
6.2 Service . . . 39
6.3 Preparing cleaning/disinfection . . . 39
6.4 Performing cleaning/disinfection . . . 40
6.4.1 Cleaning and disinfecting the device . . . 41
6.4.2 Cleaning and disinfecting the rotor . . . 42
6.4.3 Cleaning the rotor lid and replacing the seal . . . 42
6.5 Additional care instructions for refrigerated centrifuges. . . . 43
6.6 Cleaning glass breakage . . . 44
6.7 Fuses . . . 44
6.8 Decontamination before shipment . . . 44

7 Troubleshooting . . . 45
7.1 General errors . . . 45
7.2 Error messages . . . 45
7.3 Emergency release . . . 47

8 Transport, storage and disposal . . . 49
8.1 Transport . . . 49
8.2 Storage . . . 49
8.3 Disposal . . . 50

9 Technical data . . . 51
9.1 Power supply . . . 51
9.2 Ambient conditions . . . 51
9.3 Weight/dimensions . . . 52
9.4 Noise level . . . 52
9.5 Application parameters . . . 53
9.6 Service life of accessories . . . 54

10 Rotors for the Centrifuge 5425 R. 55
10.1 Rotor FA-24×2 and rotor FA-24×2-PTFE. 56
10.2 Rotor FA-18×2 kit 57
10.3 Rotor FA-10×5 58
10.4 Rotor F-32×0.2-PCR 59
10.5 Rotor S-96×0.2 60

11 Ordering Information 61

Certificates 63

1 Operating instructions

1.1 Using this manual

- Read this operating manual completely before using the device for the first time. Observe the instructions for use of the accessories where applicable.
- This operating manual is part of the product. Please keep it in a place that is easily accessible.
- Enclose this operating manual when transferring the device to third parties.
- The current version of the operating manual for all available languages can be found on our webpage www.eppendorf.com/manuals.

1.2 Danger symbols and danger levels

1.2.1 Danger symbols

The safety instructions in this manual have the following danger symbols and danger levels:

	Hazard point		**Biohazard**
	Electric shock		**Risk of crushing**
	Material damage		**Explosive substances**

1.2.2 Danger levels

DANGER	*Will* lead to severe injuries or death.
WARNING	*May* lead to severe injuries or death.
CAUTION	May lead to light to moderate injuries.
NOTICE	May lead to material damage.

1.3 Symbols used

Depiction	Meaning
1. 2.	Actions in the specified order
▸	Actions without a specified order
•	List
Text	Display or software texts
ⓘ	Additional information

1.4 Abbreviations used

CE
European Community – A CE indicates that a product has been tested before being placed on the market and complies with the safety, health and/or environmental protection requirements of the European Union.

PCR
Polymerase Chain Reaction

PTFE
Polytetrafluorethylene

rcf
Relative centrifugal force : *g*-force in m/s^2

rpm
Revolutions per minute

UV
Ultraviolet radiation

2 Safety

2.1 Intended use

The Centrifuge 5425 R is a non-automatic centrifuge for separating liquid substance mixtures from the human body and is specifically intended for use as an accessory with an in-vitro diagnostic device in order to facilitate the in-vitro diagnostic device to be used in accordance with its intended use.

Eppendorf centrifuges are only intended for indoor use and for operation by trained and skilled personnel.

2.2 User profile

The device and accessories may only be operated by trained and skilled personnel.

Before using the device, read the operating manual and the instructions for use of the accessories carefully and familiarize yourself with the device's mode of operation.

2.3 Application limits

DANGER! Risk of explosion.

- Do not use the device in an explosive atmosphere.
- Do not operate the device in areas where work with explosive substances is carried out.
- Do not use the device to process any explosive or highly reactive substances.
- Do not use the device to process any substances which could generate an explosive atmosphere.

Due to its design and the environmental conditions inside the device, the Centrifuge 5425 R is not suitable for use in a potentially explosive atmosphere.

The device may only be used in a safe environment, such as in the open environment of a ventilated laboratory or a fume hood. The use of substances that could contribute to a potentially explosive atmosphere is not permitted. The final decision on the risks associated with the use of such substances is the user's responsibility.

2.4 Warnings for intended use

2.4.1 Personal injury or damage to device

WARNING! Electric shock due to damage to the device or the mains/power cord.

- Only switch on the device if the device and the mains/power cord are undamaged.
- Only operate devices which have been installed or repaired properly.
- In the event of danger, disconnect the device from the mains/power supply voltage. Disconnect the mains/power plug from the device or the earth/grounded socket. Use the isolating device intended for this purpose (e.g., the emergency switch in the laboratory).

WARNING! Lethal voltages inside the device.
Touching high-voltage parts can cause an electric shock. Electric shocks can cause heart injury and respiratory paralysis.

- Ensure that the housing is closed and undamaged.
- Do not remove the housing.
- Make sure that no liquids enter the device.

Only authorized service staff may open the device.

WARNING! Danger due to incorrect voltage supply.

- Only connect the device to voltage sources which correspond with the electrical requirements specified on the name plate.
- Only use earth/grounded sockets with a protective earth conductor.
- Only use the mains/power cord supplied.

WARNING! Damage to health due to infectious liquids and pathogenic germs.

- When handling infectious liquids and pathogenic germs, observe the national regulations, the biosafety level of your laboratory, and the manufacturers' Safety Data Sheets and application notes.
- Wear your personal protective equipment.
- For comprehensive regulations about handling germs or biological material of risk group II or higher, please refer to the "Laboratory Biosafety Manual" (source: World Health Organization, Laboratory Biosafety Manual, in the currently valid version).

WARNING! Risk of injury when opening or closing the centrifuge lid.
There is a risk of crushing your fingers when opening or closing the centrifuge lid.

- Do not reach between the device and centrifuge lid when opening or closing the centrifuge lid.
- Do not reach into the locking mechanism of the centrifuge lid.
- Open the centrifuge lid fully to ensure that the centrifuge lid cannot slam shut.

WARNING! Risk of injury from rotating rotor.
If the emergency release of the lid is operated, the rotor may continue to rotate for several minutes.

- Wait for the rotor to stop before activating the emergency release.
- To check, look through the monitoring glass in the centrifuge lid.

WARNING! Risk of injury from chemically or mechanically damaged accessories.
Even minor scratches and cracks can lead to severe internal material damage.

- Protect all accessory parts from mechanical damage.
- Inspect the accessories for damage before each use. Replace any damaged accessories.
- Do not use any accessories which have exceeded their maximum service life.

CAUTION! Poor safety due to incorrect accessories and spare parts.
The use of accessories and spare parts other than those recommended by Eppendorf may impair the safety, functioning and precision of the device. Eppendorf cannot be held liable or accept any liability for damage resulting from the use of accessories and spare parts other than those recommended or from improper use.

- Only use accessories and original spare parts recommended by Eppendorf.

NOTICE! Damage to the device due to spilled liquids.

1. Switch off the device.
2. Disconnect the device from the mains/power supply.
3. Carefully clean the device and the accessories in accordance with the cleaning and disinfection instructions in the operating manual.
4. If a different cleaning and disinfecting method is to be used, contact Eppendorf SE to ensure that the intended method will not damage the device.

NOTICE! Damage to electronic components due to condensation.
Condensate may form in the device when it has been transported from a cool environment to a warmer environment.

- After installing the device, wait for at least 4 h. Only then connect the device to the mains/power line.

2.4.2 Incorrect handling of the centrifuge

NOTICE! Damage from knocking against or moving the device during operation.
If the rotor hits the rotor chamber wall, it will cause considerable damage to the device and rotor.

- Do not move or knock against the device during operation.

2.4.3 Incorrect handling of the rotors

WARNING! Risk of injury from improperly attached rotors and rotor lids.

- Only centrifuge with the rotor and rotor lid firmly tightened.
- If any unusual noises occur when the centrifuge starts, the rotor or the rotor lid may not be attached properly. Stop the centrifugation immediately.

CAUTION! Risk of injury due to asymmetric loading of a rotor.

- Always load all positions of a swing-bucket rotor with buckets.
- Load buckets symmetrically with identical tubes or plates.
- Only load adapters with suitable tubes or plates.
- Always use tubes or plates of the same type (weight, material/density and volume).
- Use a balance to check that loading is symmetrical by balancing the adapters and tubes or plates that are used.

8

CAUTION! Risk of injury from overloaded rotor.
The centrifuge is designed for the centrifugation of material with a maximum density of 1.2 g/mL at maximum speed and filling volume and/or load.

- Do not exceed the maximum load of the rotor.

NOTICE! Damage to rotors from aggressive chemicals.
Rotors are high-quality assemblies designed to withstand extreme stresses. This stability can be impaired by aggressive chemicals.

- Avoid using aggressive chemicals such as strong and weak alkalis, strong acids, solutions with mercury ions, copper ions and other heavy metal ions, halogenated hydrocarbons, concentrated saline solutions and phenol.
- If it is contaminated by aggressive chemicals, clean the rotor and especially the rotor bores immediately using a neutral cleaning agent.
- Due to the manufacturing process, color variations may occur on PTFE coated rotors. These color variations do not affect the service life or resistance to chemicals.

2.4.4 Extreme strain on the centrifugation tubes

CAUTION! Risk of injury from overloaded tubes.

- Note the loading limits specified by the tube manufacturer.
- Only use tubes which are approved by the manufacturer for the required *g*-forces (rcf).

NOTICE! Danger from damaged tubes.
Damaged tubes must not be used, as this could cause further damage to the device and the accessories and loss of the samples.

- Visually check all tubes for damage before use.

NOTICE! Danger from open tube lids.
Open tube lids may break off during centrifugation and damage both the rotor and the centrifuge.

- Carefully seal all tube lids before centrifuging.

Exception: Note the information on the centrifugation of spin columns in the FA-18×2-KIT rotor.

NOTICE! Damage to plastic tubes due to organic solvents.
The density of plastic tubes is reduced when organic solvents (e.g. phenol, chloroform) are used, i.e. the tubes may become damaged.

- Note the manufacturer's information on the chemical resistance of the tubes.

NOTICE! Danger due to deformed or brittle tubes. Autoclaving at excessively high temperatures can lead to plastic vessels becoming brittle and deformed.
This could result in damage to the device and the accessories and sample loss.

- Observe the temperatures specified by the manufacturer when autoclaving tubes.
- Do not use any deformed or brittle tubes.

2.5 Safety instructions on the device

Depiction	Meaning	Location
	NOTICE ▸ Observe the safety instructions in the operating manual.	Right side of the device
	▸ Observe the operating manual.	
	▸ Warning: Possible hand injury.	Upper side of the device, under the centrifuge lid.
	CAUTION ▸ Always tighten the rotor with the enclosed rotor key.	Upper side of the device, under the centrifuge lid.
	Warning of biological risks when handling infectious liquids or pathogenic germs.	Aerosol-tight fixed-angle rotors: rotor lid

2.6 Obligation to report accidental damage or damage to the device

As the operator of a medical device, you are obliged to report serious accidents or injuries to persons caused by our device to the following authorities:

- The competent local authorities
- Eppendorf SE
- Your local Eppendorf distributor

2.6.1 Manufacturer Eppendorf SE

Eppendorf SE

Barkhausenweg 1

22339 Hamburg

GERMANY

eppendorf@eppendorf.com

2.6.2 Local Eppendorf distributor

https://www.eppendorf.com/contact

3 Product description

3.1 Product overview

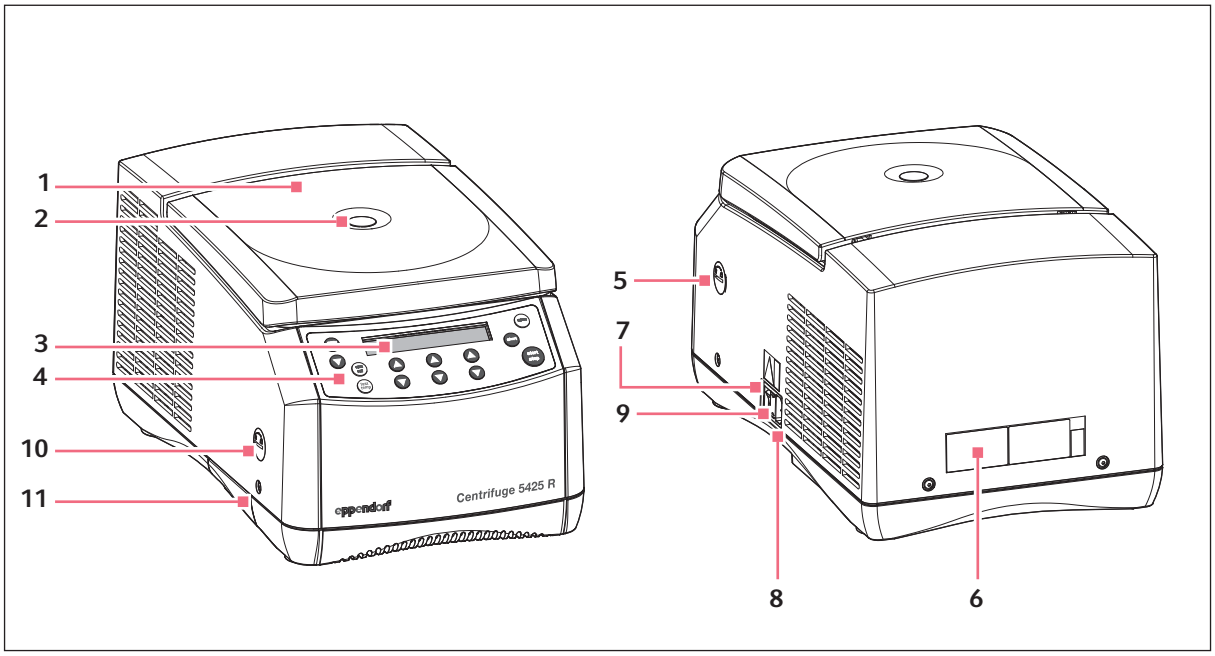

Fig. 3-1: Front and rear view of the Centrifuge 5425 R

1 **Centrifuge lid**

2 **Monitoring glass**
Visual control for rotor stop or speed control option using stroboscope

3 **Display**

4 **Control panel**
Keys and rotary knobs (dependent on the device version) for the operation of the centrifuge.

5 **Emergency release** 7.3

6 **Name plate**

7 **Mains/power switch**
Switch for switching the centrifuge on and off

8 **Mains/power connection**
Connection socket for the mains/power cord supplied

9 **Fuse holder**

10 **Interface for software updates**
For authorized service personnel only

11 **Condensation water tray**

3.2 Delivery package

1	Centrifuge 5425 R
1	Rotor key
1	Mains/power cord
1	Fuse
1	Instructions
1	Condensation water tray

- Check that the delivery is complete.
- Check all parts for transport damage.
- To safely transport and store the device, retain the transport box and packing material.

3.3 Features

The versatile Centrifuge 5425 R has a capacity of up to 10 x 5 mL and reaches a maximum of 21,300 x ***g*** / 15,060 rpm. You can choose from six different rotors to centrifuge the following tubes for your various applications: 5

- Micro test tubes (0.2 to 5.0 mL)
- PCR strips
- Microtainers (0.6 mL)
- Spin columns (1.5/2.0 mL)
- Cryogenic tubes

The Centrifuge 5425 R has an additional temperature control function for centrifugation between -10 °C and +40 °C. The **fast temp** function is used to start a temperature control run without samples in order to quickly bring the rotor chamber to the set temperature. 4

The Centrifuge 5425 R can be connected to the Eppendorf VisioNize system. The Eppendorf VisioNize system provides the option to connect the centrifuge to centralized monitoring and data management software. For more information, please visit www.eppendorf.com.

3.4 Name plate

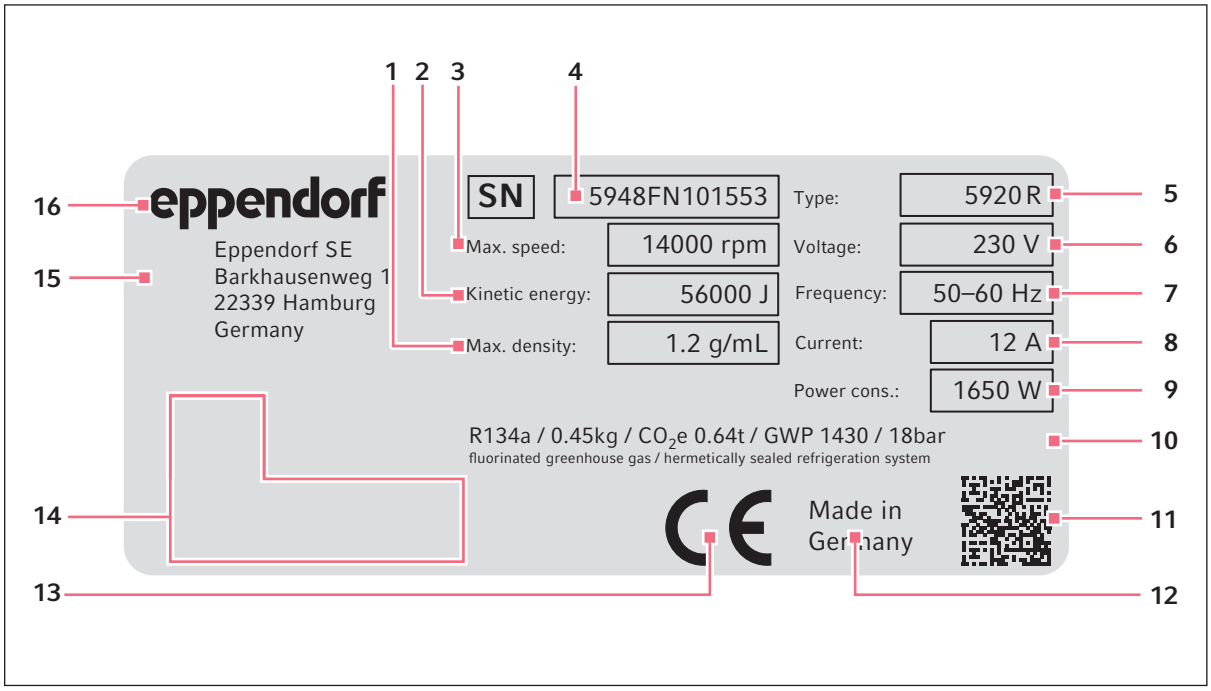

Fig. 3-2: Device identification of Eppendorf SE (example)

1 **Maximum density of the material for centrifuging**

2 **Maximum kinetic energy**

3 **Maximum speed**

4 **Serial number**

5 **Product name**

6 **Rated voltage**

7 **Rated frequency**

8 **Maximum rated current**

9 **Maximum rated power**

10 **Information on the refrigerant (refrigerated centrifuges only)**

11 **Data matrix code for serial number**

12 **Designation of origin**

13 **CE marking**

14 **Certification marks and symbols (device-specific)**

15 **Manufacturer's address**

16 **Manufacturer**

Tab. 3-1: Certification marks and symbols (device-specific)

Symbol/certification mark	**Meaning**
SN	Serial number
	Manufacturer
IVD	Label identifying an in-vitro diagnostic device
	Symbol for waste electrical and electronic equipment (WEEE) according to EU Directive 2012/19/EU, European Community
c UL US LISTED	UL listing certification mark: Declaration of conformity, USA
FC	Certification mark for electromagnetic compatibility of the *Federal Communications Commission*, USA
	Certification mark China – Use of certain hazardous substances in electrical and electronic products *(Requirements for Concentration Limits for Certain Hazardous Substances in Electronic Information Products SJ/T 11363-2006)*, People's Republic of China

4 Installation

4.1 Selecting the location

WARNING! Danger due to incorrect voltage supply.

- Only connect the device to voltage sources which correspond with the electrical requirements on the name plate.
- Only use earth/grounded sockets with a protective earth (PE) conductor.
- Only use mains/power cords that are approved for the technical data specified on the name plate and taking into account national laws and regulations. This also includes testing labels if required by law.

NOTICE! If a fault occurs, any objects in the immediate proximity of the device will be damaged.

- In accordance with the recommendations of EN 61010-2-020, leave a safety clearance of **30 cm** around the device during operation.
- Please remove all materials and objects from this area.

NOTICE! Damage from overheating.

- Do not install the device near heat sources (e.g., heaters, drying cabinets).
- Do not expose the device to direct sunlight.
- Ensure unobstructed air circulation. Maintain a clearance of at least 30 cm around all ventilation gaps.

NOTICE! Radio interference.
For devices with Class A noise emission in accordance with DIN EN 61326-1:2013-07 and DIN EN 55011:2018-05, the following applies: This device has been developed and tested in accordance with CISPR 11 Class A. The device may cause radio interference in domestic environments and is not intended for use in residential areas. The device cannot ensure adequate protection of radio reception in residential areas and domestic environments.

- If necessary, take appropriate measure to eliminate the interferences.

Mains/power connection for centrifuges: Operation of the centrifuge is only permitted in building installations that comply with the applicable national regulations and standards. In particular, it must be ensured that there are no impermissible loads on the supply lines and assemblies that are located upstream of the internal protection of the device. This can be ensured by using additional circuit breakers or other suitable fuse elements in the building installation.

The mains/power switch and the disconnecting device of the mains/power line must be accessible during operation (e.g., residual current circuit breaker).

Select the location for the device according to the following criteria:
- Mains/power connection in accordance with the name plate

- Minimum distance to other devices and walls: 30 cm
- A resonance-free table with a horizontal, even work surface
- The location has good ventilation.
- The location is protected against direct sunlight.

▸ Do not use this device near strong electromagnetic sources (e.g., unshielded high frequency sources) as they could impair the proper operation of the device.

4.2 Preparing installation

Prerequisites

The weight of the Centrifuge 5425 R is 21 kg. For unpacking and installing the Centrifuge 5425 R, you require the assistance of another person.

Perform the following steps in the order described:

1. Open the packaging board.
2. Remove the accessories.
3. Reach with your hands under the device and lift the centrifuge from the carton with another person.
4. Remove the front and back transport protection pads.
5. Place the device on a suitable lab bench.
6. Remove the plastic sleeve.

4.3 Installing the instrument

Prerequisites

The device is on a suitable lab bench.

WARNING! Danger due to incorrect voltage supply.

- Only connect the device to voltage sources which correspond with the electrical requirements specified on the name plate.
- Only use earth/grounded sockets with a protective earth conductor.
- Only use the mains/power cord supplied.

NOTICE! Damage to electronic components due to condensation.
Condensate may form in the device when it has been transported from a cool environment to a warmer environment.

- After installing the device, wait for at least 4 h. Only then connect the device to the mains/power line.

NOTICE! Compressor damage after improper transport.

- After installation, wait 4 h before switching on the centrifuge.

1. Let the device warm up to ambient temperature.
2. Check that the mains voltage and frequency match the requirements on the device type plate.
3. Connect the centrifuge to the mains/power line and switch it on at the mains/power switch.
   - The display is active.
   - Lid opens automatically
4. **Only device version with rotor:**Turn rotor counterclockwise supplied rotor key and remove rotor towards the top in an upright movement.
5. Remove the transport protection pad.
6. Place the rotor vertically on the motor shaft.
7. Turn the rotor nut using the rotor key clockwise until the rotor nut is tightened.
8. Insert the condensation water tray into the holder provided .

5 Operation
5.1 Operating controls

The Centrifuge 5425 R is available in two versions: keypad or rotary knobs. This operating manual generally describes the operation of the keypad version. It also applies to the rotary knob version, however.

Familiarize yourself with the operating controls and the display before using the Centrifuge 5425 R for the first time.

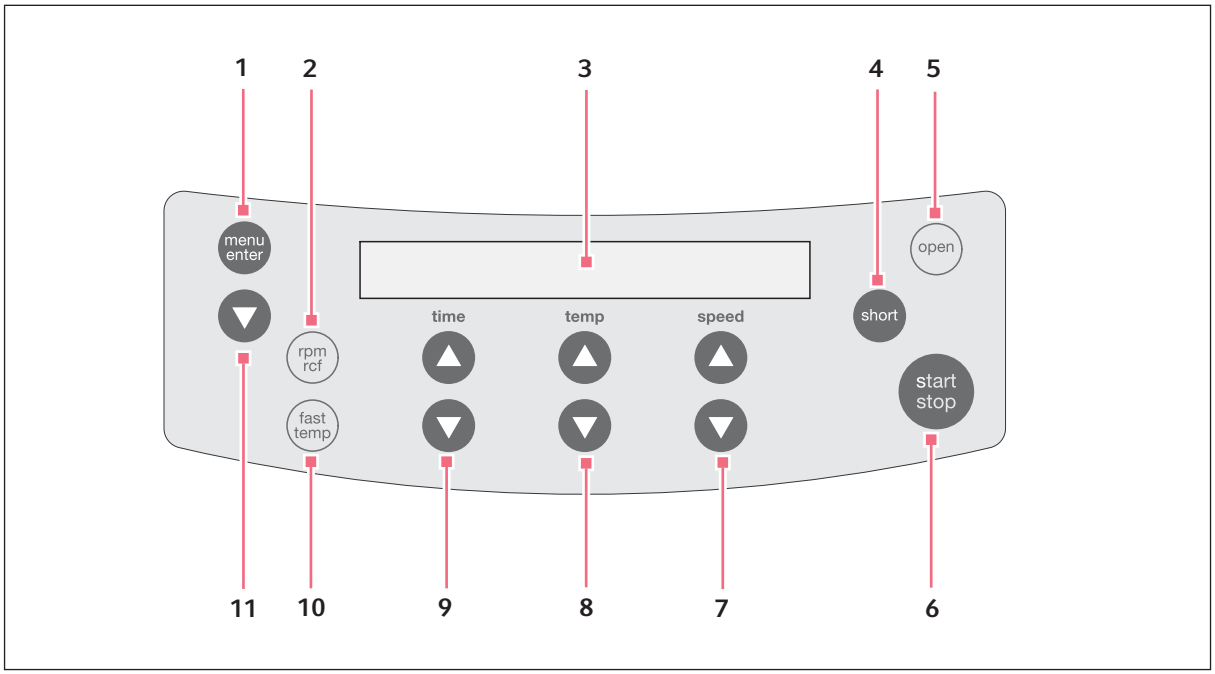

Fig. 5-1: Control panel of the Centrifuge 5425 R

1 **Calls up and selects menu parameters**

2 **Switches the displayed speed of centrifugation (rpm/rcf)**

3 **Display**

4 **Short run centrifugation**

5 **Releases the lid**

6 **Starts and stops centrifugation**

7 **Sets the speed of centrifugation**
Designed as keys or a rotary knob, depending on the device version.

8 **Sets the temperature**

9 **Sets the centrifugation time**
Designed as keys or a rotary knob, depending on the device version.

10 **Starts a fast temp temperature control run**

11 **Selects a menu item**

Please also read the precise description of the individual menu functions(see p. 28).

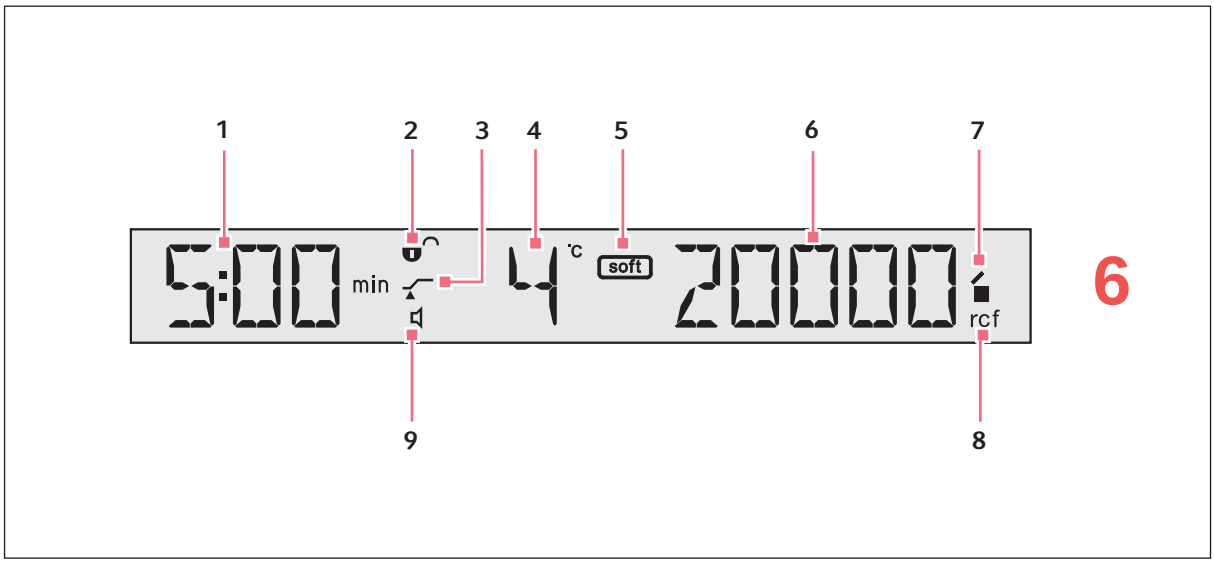

Fig. 5-2: Display of the Centrifuge 5425 R

1 **Centrifugation time**

2 **Status of the key lock (LOCK)**
🔒: Centrifugation parameters cannot be modified unintentionally.
🔓: No key lock.

3 **Status of ATSET function**
: Start of run time when reaching 95% of the preset *g-force* (rcf) / speed (rpm).
: Immediate start of run time.

4 **Temperature**

5 **Soft ramp**
soft: Rotor accelerates and brakes slowly.
No symbol: Rotor accelerates and brakes rapidly.

6 ***g-force* (rcf) / speed (rpm)**

7 **Centrifuge status**
: Centrifuge lid unlocked.
■: Centrifuge lid locked.
■ (Flashes): centrifugation in progress.

8 **Status of centrifugation speed display**
rcf: *g-force* (relative centrifugal force, rcf)
rpm: Speed (revolutions per minute)

9 **Speaker status**
: Switched on
: Switched off

5.2 Navigating in the menu

1.	menu enter	To open the menu, press the **menu/enter** key.
2.	▼	Select the menu item with the menu arrow keys.
3.	menu enter	To confirm your selection, press the **menu/enter** key.
4.	▼	Change the settings with the menu arrow key.
5.	menu enter	To confirm your selection, press the **menu/enter** key.

- In order to leave a menu level, select *BACK* and confirm with the **menu/enter** key.

5.3 Menu structure

Tab. 5-1: Menu structure of the Centrifuge 5425 R. All menu levels contain the additional menu item **Back**.

Level 1 (M I)	Level 2 (M 2)	Function	Display
SOFT Soft ramp: Reduce the speed of the acceleration and braking ramp. Not used for short spin centrifugation.	**ON** **OFF**	Rotor accelerates and brakes slowly. Rotor accelerates and brakes rapidly.	SOFT
LOCK Key lock: Set the current centrifugation parameters permanently to prevent the time, temperature (5425 R only) and the *g-force* (rcf) / speed (rpm) from being unintentionally modified.	**ON** **OFF**	Set the centrifugation parameters permanently. When you select the **time**, **temp** and **speed** keys, the display shows **SAFE**.	
ATSET Set start of centrifuging run time.	**ON** **OFF**	The set run time is counted down only once 95% *of the specified g-force* (rcf) / speed (rpm) has been reached. The set time is counted down immediately.	
SHORT Before the start of a short spin run it is possible to switch between the maximum and currently set *g-force* (rcf) / speed (rpm). The SOFT function is not used for short spin centrifugation.	**MAX** **SET**	Short spin run at maximum *g-force* (rcf) / speed (rpm) of the rotor used. Short spin run at the set *g-force* (rcf) / speed (rpm).	
TEMP Set the time limit for continuous cooling (see p. 34).	**8 h** **oo**	Preset value. Endless operation of continuous cooling. Icing possible! Note that this may reduce the service life of the compressor.	
ALARM	**ON** **OFF**	Switch on loudspeaker. Switch off loudspeaker.	
VOL	**VOL1** ... **VOL5**	Adjust the speaker volume in 5 steps. The loudspeaker must be switched on for the adjustment to be audible.	
SLEEP Standby mode	**ON** **OFF**	If the centrifuge has not been used for 15 min and the standby mode has been switched on, it switches to standby mode. The **EP** logo then appears in the display. When a button or knob is used or the centrifuge lid is closed, the centrifuge is reactivated. It is then ready for operation. Standby mode deactivated.	

5.4 Preparing for centrifugation

5.4.1 Switching on the centrifuge

1. Switch on the centrifuge at the mains/power switch.
   After switching the device on at the mains/power switch, the centrifuge lid opens automatically.
2. Open the closed centrifuge lid by pressing the **open** key.
   The parameter settings of the last run are displayed.

5.4.2 Removing the rotor

1. Turn the rotor nut counterclockwise with the rotor key included in the delivery.
2. Lift the rotor out vertically.

5.4.3 Inserting the rotor

1. Place the rotor vertically on the motor shaft.
2. Insert the supplied rotor key into the rotor nut.
3. Turn the rotor key clockwise until the rotor nut is firmly tightened.

The centrifuge does not detect the new rotor immediately after a rotor change. For this reason, carry out a rotor detection during which the set ***g***-force (rcf) or speed (rpm) is checked and, if necessary, adjusted after each rotor change. **2.2**

5.4.4 Triggering rotor detection

CAUTION! Risk of injury when turning the rotor manually.

- When turning a swing-bucket rotor, ensure that your fingers do not get jammed or caught on the buckets.

The centrifuge does not detect automatically whether the newly inserted rotor is a fixed-angle rotor or a swing-bucket rotor.

1. In order to trigger rotor detection manually, turn the rotor **counterclockwise** by hand.

Triggering rotor detection using short spin centrifugation

- Keep the **short** key pressed.

In the case of fixed-angle rotors, **High Speed** appears on the display.
In the case of swing-bucket rotors, **Low Speed** appears on the display.

5.4.5 Loading the rotor

CAUTION! Risk of injury due to asymmetric loading of a rotor.

- Load rotors symmetrically with identical tubes.
- Only load adapters with suitable tubes.
- Always use the same type of tubes (weight, material/density and volume).
- Use a balance to check that the load is symmetrical by balancing the adapters and tubes that are used.

CAUTION! Danger from damaged or overloaded tubes.

- When loading the rotor, observe the safety instructions for hazards resulting from overloaded or damaged tubes.

Rotor lid

- Fixed-angle rotors may only be operated with the appropriate rotor lid in each case. This is clearly shown by the identical rotor name labeling on the rotor and on the rotor lid.
- To carry out an aerosol-tight centrifugation, an aerosol-tight rotor (label: **red ring**) and the corresponding aerosol-tight rotor lid (label: **aerosol-tight** and **red lid screw**) must be used.

To load the rotor, proceed as follows:

1. Check the maximum load (adapter, tube and contents) per rotor bore.
   The information about this can be found on every rotor and in this operating manual (see *on p. 55)*.
2. Load rotors and adapters only with the tubes intended for them.
3. Insert tubes opposite each other in pairs into the rotor bores. To ensure symmetrical loading, tubes that are arranged opposite each other must be of the same type and contain the same filling quantity.

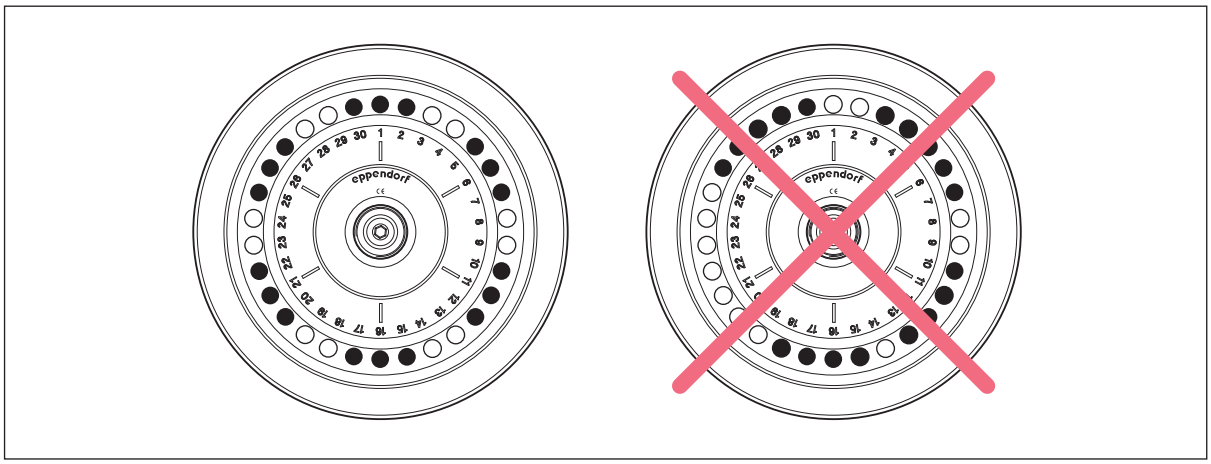

   To keep the weight differences between the filled sample tubes low, we recommend taring with a balance. This will reduce wear on the drive and cut operating noise.
4. Attach and tighten the rotor lid.

With the rotors FA-24×2, FA-18×2-KIT and FA-10×5, centrifugation is also possible without a rotor lid.

Please also note:
- The tube lids must be closed securely.
- The rotors are not aerosol-tight without rotor lid.
- The centrifugation is slightly louder.
- Spin columns must always be centrifuged with a rotor lid.

Spin columns
When centrifuging spin columns in the rotor FA-18×2-KIT, you can leave the tube lids open. However, this is only permitted with the tubes specified by the kit manufacturers. For reliable centrifugation, you must lean the open tube lids against the edge of the rotor. Ensure that the lids do not protrude past the edge of the rotor in the process, then attach the matching rotor lid.

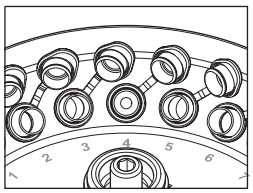

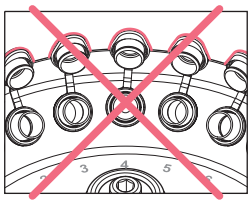

Note on loading the rotor S-96×0.2
In split PCR plates, two of the four plate parts always have a wider edge on one side. Insert these plate parts with the wider edge facing inwards into the rotor.
Make sure that the PCR plates with a wide edge are always placed opposite each other in the rotor otherwise an imbalance will occur during operation.

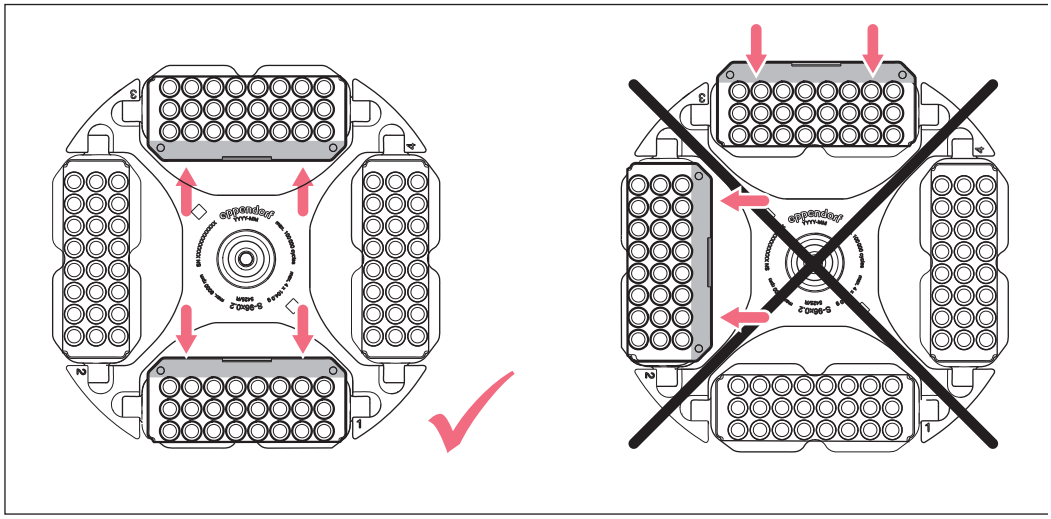

5.4.6 Closing the centrifuge lid

WARNING! Risk of injury when opening or closing the centrifuge lid.
There is a risk of crushing your fingers when opening or closing the centrifuge lid.

- Do not reach between the device and centrifuge lid when opening or closing the centrifuge lid.
- Do not reach into the locking mechanism of the centrifuge lid.
- Open the centrifuge lid fully to ensure that the centrifuge lid cannot slam shut.

1. Check correct attachment of rotor and rotor lid.
2. Push down the centrifuge lid until the lid latch engages and the lid is automatically closed.

The centrifuge will close automatically.

The **open** key lights up blue. The display shows the symbol ■.

5.4.7 Closing the QuickLock rotor lid

7

Aerosol-tight rotors have a QuickLock rotor lid.

Identification of aerosol-tight rotors
An aerosol-tight rotor and the matching aerosol-tight rotor lid must be used for aerosol-tight centrifugation.

Aerosol-tight fixed-angle rotor
- Designation begins with **FA**
- **Red ring**

Aerosol-tight rotor lid
- Labeled **aerosol-tight**
- **Red lid screw**

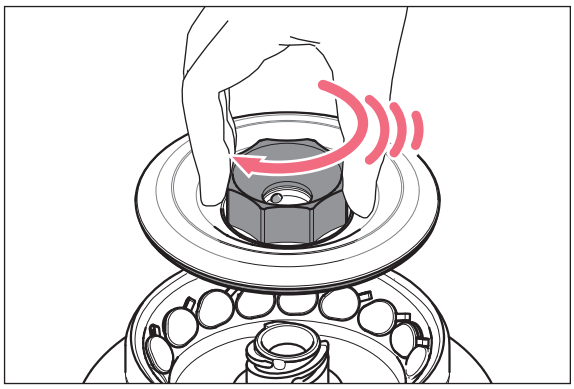

1. Check the correct positioning of the external sealing ring in the groove.
2. Place the rotor lid on the rotor in a vertical motion.
3. To lock the rotor, turn the red rotor lid screw clockwise as far as it will go, and after an audible "click" is heard.

The rotor is only properly locked after the audible "click" is heard!

5.5 Cooling

5.5.1 Temperature adjustment

- Select a temperature (-10 °C to +40 °C) using the arrow keys **temp**.
  The temperature can also be changed during centrifugation.

4

5.5.2 Temperature display

If the rotor is stopped:	Set temperature
During centrifugation:	Actual temperature

5.5.3 Temperature monitoring

After the set temperature has been reached, the centrifuge reacts to temperature deviations during centrifugation as follows:

Deviation from the target value	Action
ΔT > 3°C	Temperature display flashes.
ΔT > 5°C	Display *Error 18*. Centrifugation is stopped automatically.

5.5.4 FastTemp

With this function, you can immediately start a temperature control run without samples, at rotor- or temperature-specific speeds. This will quickly bring the rotor chamber, including rotor and adapter, up to the set target temperature.

Prerequisites

- The centrifuge is switched on.
- The rotor and rotor lid are attached properly.
- The centrifuge lid is closed.
- The temperature has been set for the upcoming centrifugation.

1. Press the **fast temp**key.
   The display shows *FT*, the current temperature and *g*-force (rcf)/speed (rpm).
   The temperature control run ends automatically when the set temperature is reached. A periodic signal tone sounds.
2. Press the **start/stop** key to end the temperature control run early.

After the temperature control run has ended, the centrifuge maintains the rotor chamber temperature at the target temperature when the centrifuge lid is closed, if the target temperature is below the ambient temperature. However, regardless of the target temperature, 4 °C must be reached with this continuous cooling in order to prevent the rotor chamber from freezing.

5.5.5 Continuous cooling

If the rotor stops, the rotor chamber will be maintained at the set temperature if the following requirements have been met:

- The centrifuge is switched on.
- The centrifuge lid is closed.
- The set temperature is lower than the ambient temperature.

The following factors apply during the continuous cooling:

- The set temperature will be displayed.
- Independent of the set temperature, 4 °C must be achieved in order to prevent the rotor chamber or sample from freezing and to prevent increased condensation in the device.
- The temperature adjustment takes longer because the rotor is not rotating.

Open the centrifuge lid to end continuous cooling.

If the centrifuge is not used for more than 8 hours, the continuous cooling is switched off automatically. This protects against ice formation in the rotor chamber and the tubes, and against increased condensation in the device.

The device then switches to standby mode. The display shows *EP*.

You can change continuous cooling to endless operation. To do so, enable the 'oo' option in the device menu under *TEMP*. Note that this may reduce the service life of the compressor.

5.6 Centrifugation

CAUTION! Danger due to incorrectly loaded rotors and damaged/overloaded tubes!

- Before commencing centrifugation, follow the safety instructions relating to risks from asymmetrically loaded and/or overloaded rotors and from overloaded, damaged and/or open tubes.

WARNING! Risk of injury from improperly attached rotors and rotor lids.

- Only centrifuge with the rotor and rotor lid firmly tightened.
- If any unusual noises occur when the centrifuge starts, the rotor or the rotor lid may not be attached properly. Stop the centrifugation immediately.

Familiarize yourself with the operating controls and the display before using the Centrifuge 5425 R for the first time.

Each of the centrifuging variants described here must be preceded by the preparation described above.

Please also note the instructions on cooling (see p. 33).

5.6.1 Centrifugation with time setting

Perform the following steps in the order described:

1. Use **time** to set the run time.
2. Use **temp** to set the temperature.
3. Use **speed** to set the *g-force* (rcf) / speed (rpm).
4. Press **start/stop** to start the centrifugation.

During centrifugation

- flashes on the display while the rotor is running.
- The current temperature is displayed.
- The **fast temp**, **open**, **short** as well as the device menu are blocked during centrifugation.
- You can also terminate the centrifugation before the set run time has elapsed by pressing the **start/stop** key.

End of centrifugation

- The centrifuge stops automatically when the set time has elapsed. During the braking process, the elapsed centrifugation time flashes on the display. When the rotor has stopped, a signal tone sounds and the time from when the rotor stopped and **END** is shown on the display. The maximum time counting of 9:59 h remains on the display.
- The centrifuge lid remains closed to maintain the sample temperature. You can open it by pressing the **open** key.

5. Remove the material for centrifuging.

5.6.2 Centrifugation in continuous operation

Perform the following steps in the order described:

1. Use **time** to set the continuous run.

   The continuous run function can be set above 9:59 h or below 10 s. The timer shows **oo** to indicate continuous operation.

6

2. Use the **temp** arrow keys to adjust the temperature.
3. Use **speed** to set the *g-force* (rcf) / speed (rpm).
4. Press **start/stop** to start centrifugation.

   flashes on the display while the rotor is running.
   The run time is counted up.
5. Press **start/stop** to end centrifugation after the desired time period.
   - During the braking process, the centrifugation time flashes on the display.
   - When the rotor has stopped, a signal tone sounds.
   - The centrifuge lid remains closed to maintain the sample temperature. You can open it by pressing the **open** key.
6. Remove the material for centrifuging.

5.6.3 Short spin centrifugation

You can carry out a short spin run with the currently set or with the maximum *g-force* (rcf) / speed (rpm) of the rotor used. This is set in the menu structure (see *Menu structure on p. 28)*before executing the following steps in the order given:

5.6.3.1 Performing short spin centrifugation

1. A short spin run with the current *g-force* (rcf) / speed (rpm) can be set directly using the **speed** arrow keys.
2. Start short spin run: Press or press and hold the **short** key.

   Functions of the **short** key:
   - Pressing and holding the **short** key: the centrifuge runs for as long as the **short** key is pressed.
   - Briefly pressing the **short** key: the centrifuge accelerates up to the set speed (MAX or SET) and stops the short spin run shortly afterwards.

   - ■flashes on the display while the rotor is running.
   - The time is counted upwards in seconds.
   - During short spin centrifugation, all other keys are blocked.

3. End short spin run: Release the **short** key.
   - During the braking process, the centrifugation time flashes on the display.
   - The centrifuge lid remains closed to maintain the sample temperature. You can open it by pressing the **open** key.

4. Remove the material for centrifuging.

During the braking process, you can restart centrifugation up to two times by pressing the **short** key again.

The soft ramp does not work during short spin centrifugation.

5.7 Information on aerosol-tight centrifugation

WARNING! Damage to health due to limited aerosol tightness if an incorrect rotor/rotor lid combination is used.
Aerosol-tight centrifugation is only guaranteed if the rotors and rotor lids intended for this purpose are used. The designation of aerosol-tight fixed-angle rotors always starts with **FA**. The aerosol-tight rotors and rotor lids of this centrifuge are also marked with a red ring on the rotor and a red rotor lid screw.

- Always use rotors and rotor lids marked as aerosol-tight together for aerosol-tight centrifugation. The details specifying in which centrifuge the aerosol-tight rotors and rotor lids may be used can be found on the rotor and on the top of the rotor lid.
- Only use aerosol-tight rotor lids in combination with the rotors indicated on the rotor lid.

WARNING! Damage to health due to limited aerosol tightness if used incorrectly.
Mechanical stresses and contamination by chemicals or other aggressive solvents may impair the aerosol tightness of the rotors and rotor lids. Autoclaving at excessively high temperatures can lead to plastic tubes, adapters and rotor lids becoming brittle and deformed.

- Check the integrity of the seals of the aerosol-tight rotor lids or caps before each use.
- Only use aerosol-tight rotor lids or caps if the seals are undamaged and clean.
- Do not exceed temperatures of 121 °C or a time of more than 20 min. when autoclaving.
- After each proper autoclaving process (121 °C, 20 min.), coat the threads of the rotor lid screw with a thin layer of pivot grease (order no. Int. 5810 350.050, North America 022634330).
- On aerosol-tight rotor lids with exchangeable seals (e.g. QuickLock rotor lids) the seal only needs to be replaced after 50 autoclaving cycles.
- **Never** close aerosol-tight rotors or buckets for storage.

The aerosol tightness of rotors, rotor lids, buckets and caps has been tested and certified according to Annex AA of IEC 61010-2-020.

5.7.1 Aerosol-tight centrifugation in a fixed-angle rotor

To ensure aerosol tightness, the following applies:
- Replace aerosol-tight rotor lids without exchangeable seal and cap after 50 autoclaving cycles.
- Replace the seal of aerosol-tight rotor lids with exchangeable seal (e.g., QuickLock rotor lids) after 50 autoclaving cycles.
- Lightly grease the replaced seal with pivot grease after it is inserted.

6 Maintenance

6.1 Service options

Eppendorf recommends having your device checked and maintained by trained specialist personnel at regular intervals.

Eppendorf offers you tailor-made service solutions for the preventive maintenance, qualification and calibration of your device. For information, offers and contact options, please visit www.eppendorf.com/epservices.

6.2 Service

WARNING! Risk of fire or electrical shock

- Have the centrifuge's electrical safety, especially the continuity of the protective connections, checked every 12 months by trained and skilled personnel.

We recommend to have the centrifuge and the associated rotors checked by Technical Service during a service at least every 12 months. Please note the country-specific regulations.

6.3 Preparing cleaning/disinfection

- Clean all accessible surfaces of the device and the accessories at least weekly and when contaminated.
- Clean the rotor regularly. This way the rotor is protected and the durability is prolonged.
- Furthermore, observe the notes on decontamination (see *Decontamination before shipment on p. 44)*when the device is sent to the authorized Technical Service for repairs.

The procedure described in the following chapter applies to the cleaning as well as to the disinfection or decontamination. The table below describes the steps required on top of this:

Cleaning	Disinfecting/decontamination
1. Use a mild cleaning fluid to clean the accessible surfaces of the device and the accessories. 2. Carry out the cleaning as described in the following chapter.	1. Choose the disinfection method which corresponds to the legal regulations and guidelines in place for your range of application. For example, use alcohol (ethanol, isopropanol) or alcohol-based disinfectants. 2. Carry out the disinfection or decontamination as described in the following chapter. 3. Then clean the device and the accessories.

If you have any further questions regarding the cleaning and disinfection or decontamination or regarding the cleaning fluid to be used, contact the Eppendorf SE Application Support. The contact details are provided on the back of this manual.

6.4 Performing cleaning/disinfection

DANGER! Electric shock due to the ingress of liquid.

- Switch off the device and disconnect it from the mains/power line before commencing any cleaning or disinfection procedures.
- Do not allow any liquids to enter the inside of the housing.
- Do not spray clean or spray disinfect the housing.
- Only reconnect the device to the mains/power line when it is completely dry, both inside and outside.

WARNING! Damage to health due to limited aerosol tightness if used incorrectly.
Mechanical stresses and contamination by chemicals or other aggressive solvents may impair the aerosol tightness of the rotors and rotor lids. Autoclaving at excessively high temperatures can lead to plastic tubes, adapters and rotor lids becoming brittle and deformed.

- Check the integrity of the seals of the aerosol-tight rotor lids or caps before each use.
- Only use aerosol-tight rotor lids or caps if the seals are undamaged and clean.
- Do not exceed temperatures of 121 °C or a time of more than 20 min. when autoclaving.
- After each proper autoclaving process (121 °C, 20 min.), coat the threads of the rotor lid screw with a thin layer of pivot grease (order no. Int. 5810 350.050, North America 022634330).
- On aerosol-tight rotor lids with exchangeable seals (e.g. QuickLock rotor lids) the seal only needs to be replaced after 50 autoclaving cycles.
- **Never** close aerosol-tight rotors or buckets for storage.

NOTICE! Damage due to aggressive chemicals.

- Do not use any aggressive chemicals on the device or its accessories, such as strong and weak bases, strong acids, acetone, formaldehyde, halogenated hydrocarbons or phenol.
- If the device has been contaminated by aggressive chemicals, clean it immediately using a mild cleaning agent.

NOTICE! Corrosion due to aggressive cleaning agents and disinfectants.

- Do not use any corrosive cleaning agents, aggressive solvents or abrasive polishes.
- Do not incubate the accessories in aggressive cleaning agents or disinfectants for longer periods.

NOTICE! Damage from UV and other high-energy radiation.

- Do not use UV, beta or gamma rays or any other high-energy forms of radiation for disinfection.
- Avoid storage in areas with high UV radiation levels.

Autoclaving
Rotors, rotor lids and adapters can be autoclaved (121 °C, 20 min).
Replace the seal on aerosol-tight rotor lids after 50 autoclaving cycles.

Aerosol tightness
Check that the seals are intact before use.
Replace the rotor lids with screw cap when the sealing rings on the lid screw and in the lid groove become worn.
Regular care of the sealing rings is necessary in order to protect the rotors.
Aerosol-tight rotors should never be stored with the lids screwed on!
In order to prevent damage, lightly grease the lid threads of aerosol-tight rotors regularly with pivot grease (order no. int.: 5810 350.050/North America: 022634330).

6.4.1 Cleaning and disinfecting the device

1. Open the lid. Switch the device off at the mains/power switch. Disconnect the mains/power plug from the voltage supply.
2. Loosen the rotor nut by turning it counterclockwise with the rotor key.
3. Remove the rotor.
4. Clean and disinfect all accessible surfaces on the device including the mains/power cord using a damp cloth and the recommended cleaning agents.
5. Thoroughly clean the rubber seal of the rotor chamber with water.
6. Rub the dry rubber seal with, for example, glycerol to prevent it from becoming brittle. Other components of the device, such as the motor shaft and the rotor cone, must not be lubricated.
7. Clean the motor shaft with a soft, dry, lint-free cloth. Do not grease the motor shaft.
8. Inspect the motor shaft for damage.
9. Inspect the device for corrosion and damage.
10. Leave the centrifuge lid open when the device is not being used.
11. Only reconnect the device to the mains/power supply if it is fully dry on the inside and outside.

6.4.2 Cleaning and disinfecting the rotor

1. Inspect the rotor and accessories for damage and corrosion. Do not use any damaged rotors or accessories.
2. Clean and disinfect the rotors and accessories with the recommended cleaning agents.
3. Clean and disinfect the rotor bores with a bottle brush.
4. Rinse the rotors and accessories thoroughly with distilled water. Rinse the rotor bores of fixed-angle rotors particularly thoroughly.

Do not immerse the rotor in liquid as liquid can enter through the openings when doing so.

5. Place the rotors on a towel to dry. Place fixed-angle rotors with the rotor bores facing down so the bores can also dry.
6. Clean the rotor cone with a soft, dry, lint-free cloth. Do not lubricate the rotor cone.
7. Inspect the rotor cone for damage.
8. Place the dry rotor onto the motor shaft.
9. Tighten the rotor nut by turning it **clockwise**.
10. Leave the rotor lid open when the rotor is not being used.

6.4.3 Cleaning the rotor lid and replacing the seal

Prerequisites

The rotor lid has been removed.

Recommended cleaning agents:

- Alcohol 70 % (ethanol, isopropanol)
- Mild neutral cleaning agent

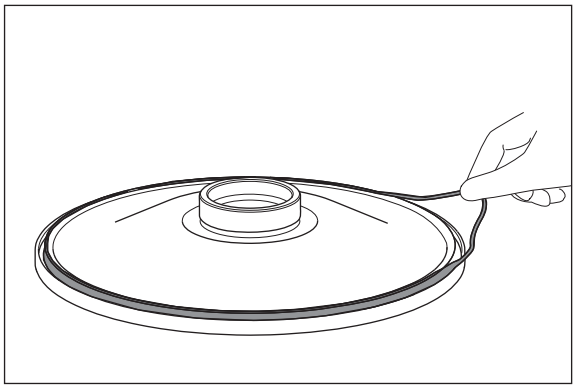

1. Remove the sealing ring to thoroughly clean the groove below it.
2. Clean and disinfect the rotor lid using the recommended cleaning agents.
3. Rinse the rotor lid thoroughly with distilled water.
4. Moisten the new sealing ring with clean water.

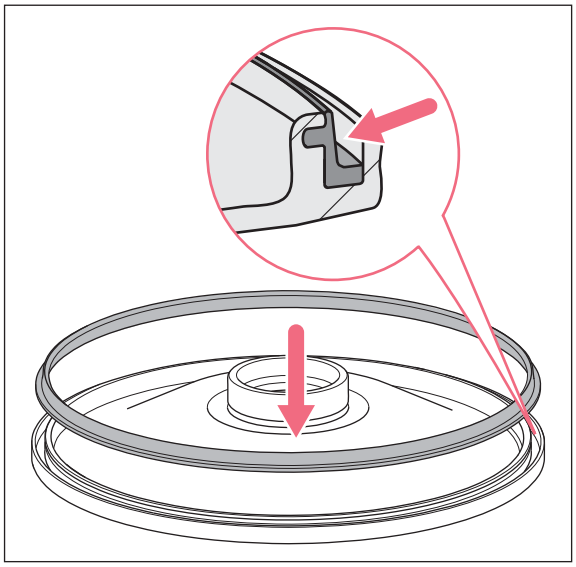

5. Insert the sealing ring into the clean groove of the rotor lid.
6. Press the sealing ring into the lateral groove, around the entire circumference of the rotor lid.
7. Place the rotor lid with the underside facing upwards on a cloth.
8. Leave the rotor lid to dry for 5 –10 minutes.
9. Perform a visual inspection.
   The seal must be flush with the groove of the rotor lid around the entire circumference and must not protrude at any point.
10. Fit the rotor lid on the rotor.
11. Leave the rotor lid open when the rotor is not being used.

The rotor lid cannot close properly if the sealing ring is not correctly inserted.

6.5 Additional care instructions for refrigerated centrifuges.

- Empty and clean the condensation water tray regularly and especially after liquid spillage in the rotor chamber. Pull out the condensation water tray front left under the device.
- Regularly defrost the rotor chamber for the refrigerated devices, either by leaving the centrifuge lid open or carrying out a brief temperature control run at approx. 30 °C.
- Wipe up condensation water in the rotor chamber. Use a soft absorbent cloth for this.

Leave the centrifuge lid open in order to allow the condensation water to evaporate.

- No later than every 6 months, remove any dust deposits from the ventilation gaps of the centrifuge using a brush or swab. First switch off the centrifuge and remove the mains/power plug.

6.6 Cleaning glass breakage

When using glass tubes there is a risk of glass breakage in the rotor chamber. The resulting glass splinters are swirled around in the rotor chamber during centrifugation and have a sandblasting effect on the rotor and accessories. Very small particles of glass can become lodged in the rubber parts (e.g., the motor sleeve, the rotor chamber seal, and the rubber mats of adapters).

NOTICE! Glass breakage in the rotor chamber
Glass tubes in the rotor chamber may break if the *g*-force is too high. Broken glass can damage the rotor, accessories and samples.

- Please note the manufacturer's information on the recommended centrifugation parameters (load and speed).

Effects of glass breakage in the rotor chamber:
- Fine black metal abrasion dust in the rotor chamber (with metal rotor bowls).
- The surfaces of the rotor chamber and accessories are scratched.
- The chemical resistance of the rotor chamber is reduced.
- Contamination of samples.
- Wear on rubber parts.

How to proceed in case of glass breakage

1. Remove all splinters and glass powder from the rotor chamber and accessories.
2. Thoroughly clean the rotor and rotor chamber. Thoroughly clean the bores of the fixed-angle rotors, in particular.
3. If required, replace the adapters to prevent any further damage.
4. Regularly check the rotor bores for deposits and damage.

6.7 Fuses

1. Disconnect the mains/power plug.
2. Remove the fuse holder.
   Both fuses are now accessible and can be replaced.

6.8 Decontamination before shipment

If you are shipping the device to the authorized Technical Service for repairs or to your authorized dealer for disposal please note the following:

WARNING! Risk to health from contaminated device.

1. Observe the information in the decontamination certificate. It is available as a PDF document on our webpage (https://www.eppendorf.com/decontamination).
2. Decontaminate all the parts to be shipped.
3. Include the fully completed decontamination certificate in the shipment.

7 Troubleshooting

If you cannot remedy an error with the recommended measures, please contact your local Eppendorf partner. The contact address can be found on the Internet at www.eppendorf.com.

7.1 General errors

Problem	Cause	Solution
No display.	No mains/power connection.	▸ Check the mains/power connection.
	Mains/power outage.	▸ Check the fuse of the centrifuge. ▸ Check the mains/power fuse of the lab.
Centrifuge lid cannot be opened.	The rotor is still running.	▸ Wait for the rotor to stop.
	Mains/power outage.	1. Check the fuse of the centrifuge. 2. Check the mains/power fuse of the lab. 3. Activate the emergency lid release.
Centrifuge cannot be started.	The centrifuge lid is not closed.	▸ Close the centrifuge lid.
Centrifuge shakes when it starts up.	The rotor is loaded asymmetrically.	1. Stop the centrifuge and load symmetrically. 2. Restart the centrifuge.
Centrifuge brakes during a short run centrifugation, although the **short** key is pressed.	The **short** key was released briefly more than twice (protective function for the drive).	▸ Press the **short** key continuously during a short run centrifugation.
Temperature display flashes.	• Temperature deviation from set value: ±3 °C.	▸ Check the settings. ▸ Wait until the set temperature has been reached. ▸ Check unhindered air circulation through the air slots. ▸ Thaw ice or switch off the centrifuge and allow it to cool down.

7.2 Error messages

If the following error messages appear, proceed as follows:

1. Remedy the fault (see Remedy).
2. If necessary, repeat centrifugation.

Problem	Cause	Solution
LID ERROR	Centrifuge lid cannot be locked.	▸ Try to close the centrifuge lid again.
	Centrifuge lid cannot be released.	1. Switch the centrifuge off and back on. If the error occurs again: 1. Switch off the centrifuge. 2. Activate the emergency lid release.
	Centrifuge lid must not be released during a run.	▸ Wait for the rotor to stop.
LID LIFT	• The centrifuge lid has not been opened wide enough.	▸ Open the centrifuge lid wider by hand.
INT	Mains/power failure during a run.	▸ Check the mains/power connection.
NO RPM	Error in the rotational speed measurement system.	▸ Leave the device switched on until the error message disappears (10 s or 6 min).
Err 6	Drive fault.	▸ Repeat the run. ▸ If this error message appears again, switch centrifuge off and back on again after >20 s.
	The drive is overheated.	▸ Allow the drive to cool down for at least 15 min.
Err 7	Major deviation in the speed check.	1. Wait for the rotor to stop. 2. Tighten the rotor.
Err 8		1. Wait for the rotor to stop. 2. Repeat the run.
Err 9 to **17**	Electronics error.	▸ Switch the centrifuge off and back on again after > 20 s.
Err 18	Too high temperature deviation from set value in the rotor chamber.	▸ Check the settings. ▸ Check unhindered air circulation through the air slots. ▸ Thaw ice or switch off the centrifuge and allow it to cool down.
Err 19	Cooling circuit is overheated.	▸ Check unhindered air circulation through the air slots and allow the centrifuge to cool down.
Err 20	Temperature sensor in rotor chamber is faulty.	▸ Switch the centrifuge off and back on again after >20 s.
Err 21	The temperature sensor on the condenser is faulty.	▸ Switch the centrifuge off and back on again after >20 s.
Err 24	Cooling aggregate fault, e.g., overheated.	▸ Allow the centrifuge to cool down and repeat the run.

7.3 Emergency release

If the centrifuge lid cannot be opened, you can activate the emergency release manually.

WARNING! Risk of injury from rotating rotor.
If the emergency release of the lid is operated, the rotor may continue to rotate for several minutes.

- Wait for the rotor to stop before activating the emergency release.
- To check, look through the monitoring glass in the centrifuge lid.

Use the rotor key delivered with the Centrifuge 5425 R for the emergency release.

1. Disconnect the mains/power plug.
2. Remove the plastic cover for the emergency release on the right side of the device. Turn the plastic cover 90° **counterclockwise** using an appropriate tool (e.g., screwdriver) and remove it.
3. Insert the centrifuge rotor key in the rear hexagonal opening until a noticeable resistance is felt.
4. **Slightly press** and turn the rotor key counterclockwise.
   This will release the centrifuge lid.
5. Open the centrifuge lid.
6. Remove the rotor key and fit or turn the plastic covers back on.

8 Transport, storage and disposal

8.1 Transport

CAUTION! Risk of injury due to lifting and carrying heavy loads.
The device is heavy. Lifting and carrying the device can lead to back injuries.

- Transport and lift the device with an adequate number of helpers.
- Use a transport aid to transport the device.

- Remove the rotor from the centrifuge before transport.
- Use the original packaging and the transport securing devices for transport.

	Air temperature	Relative humidity	Atmospheric pressure
General transport	-25 °C – 60 °C	10 % – 75 %	30 kPa – 106 kPa
Air freight	-20 °C – 55 °C	10 % – 75 %	30 kPa – 106 kPa

8.2 Storage

	Air temperature	Relative humidity	Atmospheric pressure
In transport packing	-25 °C – 55 °C	10 % – 75 %	70 kPa – 106 kPa
Without transport packing	-5 °C – 45 °C	10 % – 75 %	70 kPa – 106 kPa

8.3 Disposal

Observe the relevant legal regulations when disposing of the product.

Information on the disposal of electrical and electronic devices in the European Community:

Within the European Community, the disposal of electrical devices is regulated by national regulations based on EU Directive 2012/19/EU pertaining to waste electrical and electronic equipment (WEEE).

According to these regulations, any devices supplied after August 13, 2005, in the business-to-business sphere, to which this product is assigned, may no longer be disposed of in municipal or domestic waste. They are marked with the following symbol to indicate this:

As the disposal regulations may differ from one country to another within the EU, please contact your supplier for more information.

9 Technical data

9.1 Power supply

Mains/power connection	230 V, 50 to 60 Hz 120 V, 50 to 60 Hz 100 V, 50 to 60 Hz
Current consumption	1.6 A (230 V) 3.2 A (120 V) 3.7 A (100 V)
Power consumption	max. 360 W
EMC: Noise emission (radio interference)	230 V - IEC 61326-1 / CISPR 11 / EN 61326-1 / EN 55011 – Class A 120 V - CFR 47 FCC Part 15 – Class A 120 V - IEC 61326-1 / CISPR 11 – Class A 100 V - IEC 61326-1 / CISPR 11 – Class A
EMC: Noise immunity	EN 61326-1- industrial electromagnetic environment
Overvoltage category	II
Fuses Fuses Fuses	250 V 3.15 AT HBC (230 V) 250 V 6.3 AT (120 V) 250 V 6.3 AT (100 V)
Pollution degree	2

9.2 Ambient conditions

Environment:	For indoor use only.
Ambient temperature:	10 °C to 40 °C
Max. relative humidity:	10 % to 75 %, no condensing humidity
Atmospheric pressure:	79.5 kPa – 106 kPa

9.3 Weight/dimensions

Dimensions:	Width: 290 mm Depth: 480 mm Height: 260 mm
Weight without rotor:	21.0 kg

Rotor weights	**Weight**
F-24×2	797.5 g
FA-10×5	756.5 g
FA-18×2-KIT	860 g
F-32×0.2-PCR	383 g
S-96×0.2	270 g

9.4 Noise level

The noise level was measured in a sound measuring room with accuracy class 1 (DIN EN ISO 3745), frontally, at a distance of 1 m from the device and at lab bench height.

Noise level:	< 54 dB(A)

10

9.5 Application parameters

Tab. 9-1: Acceleration time and deceleration time according to DIN 58 970 6.2

Rotor	Acceleration time	Deceleration time
FA-24×2	≤ 15 s	≤ 15 s
FA-10×5	≤ 15 s	≤ 15 s
F-32×0.2-PCR	≤ 15 s	≤ 15 s

Run time	5 s – 9:59 h, infinite (∞) • ∞ – 1 min: can be set in increments of 5 s • 1 min – 2 min: can be set in increments of 10 s • 2 min – 10 min: can be set in increments of 30 s • >10 min adjustable in increments up to 1 min
Temperature	-10 °C – 40 °C
Speed	100 rpm – 15 060 rpm • 100 rpm – 5000 rpm: can be set in increments of 10 rpm • 5000 rpm – 15 060 rpm: can be set in increments of 100 rpm
Relative centrifugal force	• 50 rcf – 2990 rcf: can be set in increments of 50 rcf • 3000 rcf – 21300 rcf: can be set in increments of 100 rcf
Maximum load	Fixed-angle rotor: 10 × 5 mL Swing-bucket rotors: 96 × 0.2 mL
Maximum kinetic energy	4136 J
Permitted density of the material for centrifuging (at maximum *g*-force (rcf) or rotational speed (rpm) and maximum load)	1.2 g/mL
Inspection obligation in Germany	No

9.6 Service life of accessories

CAUTION! Danger due to material fatigue.
If the service life is exceeded, it cannot be guaranteed that the material of the rotors and the accessories will withstand the stresses during centrifugation.

- Do not use any accessories which have exceeded their maximum service life.

Eppendorf states the maximum service life of rotors and accessories in cycles and years. The number of cycles is decisive. If determination of the number of cycles is not possible, the service life in years applies.

Each centrifugation run during which the rotor is accelerated and braked is counted as a cycle, independent of the speed and the duration of the centrifugation run.

Rotor	Maximum service life after initial setup	
FA-10×5	180000 cycles	25 years
S-96×0.2-PCR	100000 cycles	7 years

Unless stated otherwise (in the manual of the centrifuge, indications of the number of cycles on the rotor, in the instructions for use of the rotor), all other rotors and rotor lids can be used over the entire service life of the centrifuge if the following prerequisites are met:
- proper use
- recommended maintenance
- undamaged condition

Accessories	Maximum service life after first initial setup
Rotor lid of polycarbonate (PC), polypropylene (PP) or polyetherimide (PEI)	3 years
Aerosol-tight rotor lids with exchangeable seal (e.g., QuickLock rotor lids)	3 years (replace seals every 50 autoclaving cycles)
Non-aerosol-tight rotor lids	3 years
Adapter	1 year

The date of manufacture is stamped on the rotors and buckets in the format *03/15* or *03/2015* (= March 2015). On the inside of the plastic-rotor lids and aerosol-tight caps, the date of manufacture is stamped in the form of a clock .

10 Rotors for the Centrifuge 5425 R

Eppendorf centrifuges may only be operated with rotors that are intended for use with the corresponding centrifuge.

- Only use rotors that are intended for use with the corresponding centrifuge.

Please note the manufacturer's information on the centrifugation resistance of the sample tubes used (maximum *g*-force).

For ordering information, refer to the English and German version of the operating manual.

10.1 Rotor FA-24×2 and rotor FA-24×2-PTFE

Aerosol-tight fixed-angle rotor for 24 tubes 3

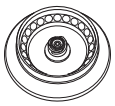	Max. *g* force:	21 300 × *g*
	Max. rotational speed:	15 060 rpm
Rotor FA-24×2 **FA-24×2-PTFE**	Max. load (adapter, tube and contents):	24 × 3.75 g

Tube	**Tube** **Capacity** **Tubes per adapter/ rotor**	**Adapter** **Order no. (international)**	**Bottom shape** **Diameter**	**Max. *g*-force** **Max. rotational speed** **Radius**
	PCR tube 0.2 mL 1/24	 5425 715.005	conical Ø 6 mm	15975 × *g* 15 060 rpm 6.3 cm
	Micro test tube 0.4 mL 1/24	 5425 717.008	conical Ø 6 mm	21 300 × *g* 15 060 rpm 8.4 cm
	Micro test tube 0.5 mL 1/24	 5425 716.001	– Ø 8 mm	18510 × *g* 15 060 rpm 7.3 cm
	Microtainers 0.6 mL 1/24	 5425 716.001	– Ø 8 mm	21 300 × *g* 15 060 rpm 8.4 cm
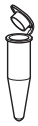	Micro test tube 1.5 mL/2 mL –/24	–	conical Ø 11 mm 3	21 300 × *g* 15 060 rpm 8.4 cm

10.2 Rotor FA-18×2 kit

Aerosol-tight fixed-angle rotor for 18 tubes

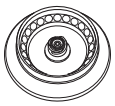	Max. *g*-force:	18565 × *g*
	Max. rotational speed:	15 060 rpm
Rotor FA-18×2 kit	Max. load (adapter, tube and contents):	18 × 3.75 g

Tube	**Tube** **Capacity** **Tubes per adapter/ rotor**	**Adapter** **Order no. (international)**	**Bottom shape** **Diameter**	**Max. *g*-force** **Max. rotational speed** **Radius**
	PCR tube 0.2 mL 1/18	 5425 715.005	Conical Ø 6 mm	13211 × *g* 15 060 rpm 5.2 cm
	Micro test tube 0.4 mL 1/18	 5425 717.008	Conical Ø 6 mm	18565 × *g* 15 060 rpm 7.3 cm
	Micro test tube 0.5 mL 1/18	 5425 716.001	– Ø 8 mm	15746 × *g* 15 060 rpm 6.2 cm
	Microtainers 0.6 mL 1/18	 5425 716.001	– Ø 8 mm	18565 × *g* 15 060 rpm 7.3 cm
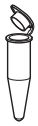	Micro test tube 1.5 mL/2 mL –/18	–	Conical Ø 11 mm	18565 × *g* 15 060 rpm 7.3 cm

10.3 Rotor FA-10×5

Aerosol-tight fixed-angle rotor for 10 tubes

	Max. *g*-force:	21300 × *g*
	Max. speed:	15060 rpm
Rotor FA-10×5	Max. load (adapter, tube and contents):	10 × 10.0 g

Tube	**Tube** **Capacity** **Tubes per adapter/ rotor**	**Adapter** **Order no. (international)**	**Bottom shape** **Diameter**	**Max. *g*-force** **Max. speed** **Radius**
	HPLC vial 1/10	 5820 770.007	Ø 11 mm	16258 × *g* 15060 rpm 6.4 cm
	Cryogenic tube 1.0 mL/2.0 mL 1/10	 5820 769.009	Ø 13 mm	18540 × *g* 15060 rpm 7.3 cm
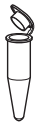	Micro test tube 1.5 mL/2.0 mL 1/10	 5820 768.002	Open Ø 11 mm	17779 × *g* 15060 rpm 7.0 cm
	Eppendorf Tubes 5 mL –/10	–	Conical Ø 17 mm	21300 × *g* 15060 rpm 8.4 cm

10.4 Rotor F-32×0.2-PCR

Fixed-angle rotor for PCR strips and PCR tubes

	Max. *g*-force:	18134 × *g*
	Max. speed:	15060 rpm
Rotor F-32×0.2-PCR	Max. load (tube and contents):	4 × 3.5 g

Tube	**Tube** **Capacity** **Vessels per rotor**	**Bottom shape** **Diameter**	**Max. *g*-force** **Max. speed** **Radius**
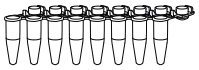	PCR strips 8 × 0.2 mL or 5 x 0.2 mL 4 × 8 or 4 × 5	Conical Ø 6 mm	18257 × *g* 15060 rpm 7.2 cm
	PCR tube 0.2 mL 32	Conical Ø 6 mm	18257 × *g* 15060 rpm 7.2 cm

10.5 Rotor S-96×0.2

Swing-bucket rotor for PCR strips, PCR tubes and divisible Eppendorf twin.tec PCR Plate 96, unskirted (4 × ¼)

	Max. *g* force:	3217 × *g*
	Max. rotational speed:	6000 rpm
Rotor S-96×0.2	Max. load per bucket (tubes and contents):	104 g

Tube	**Tube** **Capacity** **Quantity per rotor**	**Max. *g*-force** **Max. rotational speed** **Radius**
	Eppendorf twin.tec PCR Plate 96, unskirted, divisible 4 × 24 wells 4 × ¼	3217 × *g* 6000 rpm 8.0 cm
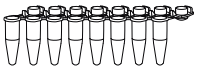	PCR strips 8 × 0.2 mL or 5 x 0.2 mL 12 × 8 or 12 × 5	3217 × *g* 6000 rpm 8.0 cm
	PCR tube 0.2 mL 96	3217 × *g* 6000 rpm 8.0 cm

11 Ordering Information

Order no. (International)	Order no. (North America)	Description
5495 500.006	5495500006	**Rotor FA-24×2** aerosol-tight, 24 × 1.5/2 mL tubes incl. aerosol-tight rotor lid, Centrifuge 5425/R
5495 501.100	5495501100	**Rotor lid FA-24×2** aerosol-tight, aluminum
5495 503.005	5495503005	**Rotor FA-24×2-PTFE** aerosol-tight, 24 × 1.5/2 mL tubes incl. aerosol-tight rotor lid, Centrifuge 5425/R
5495 504.109	5495504109	**Rotor lid FA-24×2-PTFE** aerosol-tight, aluminum
5495 505.008	5495505008	**Rotor FA-10×5** aerosol-tight, 10 × 5 mL tubes incl. aerosol-tight rotor lid, Centrifuge 5425/R
5495 506.004	5495506004	**Rotor lid FA-10×5** aerosol-tight, aluminum
5495 508.007	5495508007	**Rotor FA-18×2-KIT** aerosol-tight, 18 × 1.5/2 mL tubes incl. aerosol-tight rotor lid, Centrifuge 5425/R
5495 509.003	5495509003	**Rotor lid FA-18×2-KIT** aerosol-tight, aluminum
5495 510.001	5495510001	**Rotor F-32×0.2-PCR** 32 × 0.2 mL PCR tubes or 4 × 8 PCR tube strips incl. rotor lid, Centrifuge 5425/R
5495 511.008	5495511008	**Rotor lid F-32×0.2-PCR** aluminum
5495 512.004	5495512004	**Rotor S-96×0.2-PCR** 96 × 0.2 mL PCR tubes or 12 × 8 PCR tube strips incl. buckets
5495 513.000	5495513000	**Bucket** S-96×0.2-PCR 2 pieces
5495 515.003 5495 507.000	5495515003 5495507000	**Seal for rotor lid** FA-24×2 (Centrifuge 5420, 5425/R) FA-10×5 (Centrifuge 5425)
5301 850.249 5427 850.341	022654403 022654381	**Fuse** 4.0 A T (230 V), 2 pieces 8.0 A T (120 V, 100 V), 2 pieces

eppendorf

Declaration of Conformity

The product named below fulfills the requirements of directives and standards listed. In the case of unauthorized modifications to the product or an unintended use this declaration becomes invalid. This declaration of conformity is issued under the sole responsibility of the manufacturer.

Product name:

Centrifuge 5425 R

including components

Product type:

Centrifuge

Relevant directives / standards:

2017/746/EU: DIN EN ISO 13485, DIN EN ISO 18113-1, DIN EN ISO 18113-3, DIN EN ISO 15223-1, DIN EN ISO 14971, DIN EN 61010-2-101, DIN EN 61326-2-6, DIN EN 62366-1

2014/35/EU: DIN EN 61010-1, DIN EN 61010-2-020

2014/30/EU: DIN EN 61326-1, DIN EN 55011

2011/65/EU: DIN EN IEC 63000
(incl. (EU) 2015/863)

Further applied standards: IEC 61010-1 + Cor. + A1 + A1/Cor.1, IEC 61010-2-020, IEC 61010-2-101
UL 61010-1, UL 61010-2-020
CAN/CSA C22.2 No. 61010-1-12, CAN/CSA C22.2 No. 61010-2-020
IEC 61326-1, CISPR 11 + A1, 47 CFR FCC part 15
YY/T 0657, GB 4793.1, GB 4793.7, GB 18268.1, YY/T 0466.1, SJ/T 11364, GB/T 26572

Basic UDI-DI: 04043758-IA-CEN-003-NW

Hamburg, November 09, 2021

Dr. Wilhelm Plüster
Management Board

Dr. Marlene Jentzsch
Senior Vice President
Division Separation & Instrumentation

Your local distributor: www.eppendorf.com/contact
Eppendorf SE · Barkhausenweg 1 · 22339 Hamburg · Germany
eppendorf@eppendorf.com

ISO 9001 Certified

ISO 13485 Certified

ISO 14001 Certified

Eppendorf® and the Eppendorf Brand Design are registered trademarks of Eppendorf SE, Germany.
All rights reserved, incl. graphics and pictures. Copyright ©2021 by Eppendorf SE.

CERTIFICATE OF COMPLIANCE

Certificate Number	2020-09-10; 2021-03-15(A3/C0)-E215059
Report Reference	E215059-D1004-1/A3/C0-ULCB
Date	2020-09-10; 2021-03-15(A3/C0)
Issued to:	EPPENDORF AG
Applicant Company:	BARKHAUSENWEG 1 HAMBURG , 22339 GERMANY
Listed Company:	Same as Applicant
This is to certify that representative samples of	Centrifuge 5424 R (5404) and 5425 R (5406) Have been investigated by UL in accordance with the Standard(s) indicated on this Certificate.
Standard(s) for Safety:	UL 61010-1, 3rd Edition, May 11, 2012, Revised July 15 2015, CAN/CSA-C22.2 No. 61010-1-12, 3rd Edition, Revision dated July 2015
Additional Standards:	IEC 61010-2-011:2019, IEC 61010-2-020:2016 and IEC 61010-2-101:2018
Additional Information:	See the UL Online Certifications Directory at www.ul.com/database for additional information.

This Certificate of Compliance does not provide authorization to apply the UL Mark. Only the UL Follow-Up Services Procedure provides authorization to apply the UL Mark.

Only those products bearing the UL Mark should be considered as being UL Certified and covered under UL's Follow-Up Services.

Look for the UL Certification Mark on the product.

Bruce Mahrenholz, Director North American Certification Program

UL LLC

Any information and documentation involving UL Mark services are provided on behalf of UL LLC (UL) or any authorized licensee of UL. For questions, please contact a local UL Customer Service Representative at http://ul.com/aboutul/locations/

Type your text

Public Health England

Public Health England
National Infection Service
Porton Down
Salisbury
Wiltshire
SP4 OJG

Certificate of Containment Testing

Containment Testing of Rotor FA-24x2* in an Eppendorf 5425/R Bench Top Centrifuge

Report No. 17/016 A

Report Prepared For: Eppendorf AG, Hamburg, Germany

Issue Date: 10 February 2020 (reissued)

Test Summary

Rotor FA-24x2* was containment tested in an Eppendorf 5425/R bench top centrifuge, using Annex AA of IEC 61010-2-020:2016 (3rd Ed.). The sealed rotor was shown to contain a spill.

Report Written By

HHookway

Name: Ms Helen Hookway

Title: Biosafety Scientist

Report Authorised By

Name: Mrs Sara Speight

Title: Senior Biosafety Scientist

Please be aware that the use of the Royal Coat of Arms is highly restricted and cannot be copied. Please do not put the PHE logo on your website or use our name to endorse your products. Any reference to PHE needs to be approved by us before it can be used.

* Part no. will form part of catalogue number 5495 500.006

Public Health England

Public Health England
National Infection Service
Porton Down
Salisbury
Wiltshire
SP4 OJG

Certificate of Containment Testing

Containment Testing of Rotor FA-24x2-PTFE* in an Eppendorf 5425/R Bench Top Centrifuge

Report No. 17/016 B

Report Prepared For: Eppendorf AG, Hamburg, Germany

Issue Date: 10 February 2020 (reissued)

Test Summary

Rotor FA-24x2-PTFE* was containment tested in an Eppendorf 5425/R bench top centrifuge, using Annex AA of IEC 61010-2-020:2016 (3rd Ed.). The sealed rotor was shown to contain a spill.

Type your text

Report Written By

Name: Ms Helen Hookway

Title: Biosafety Scientist

Report Authorised By

Name: Mrs Sara Speight

Title: Senior Biosafety Scientist

Please be aware that the use of the Royal Coat of Arms is highly restricted and cannot be copied. Please do not put the PHE logo on your website or use our name to endorse your products. Any reference to PHE needs to be approved by us before it can be used.

* Part no. will form part of catalogue number 5495 503.005

Public Health England

Public Health England
National Infection Service
Porton Down
Salisbury
Wiltshire
SP4 OJG

Certificate of Containment Testing

Containment Testing of Rotor FA-10x5* in an Eppendorf 5425/R Bench Top Centrifuge

Report No. 17/016 C

Report Prepared For: Eppendorf AG, Hamburg, Germany

Issue Date: 10 February 2020 (reissued)

Test Summary

Rotor FA-10x5* was containment tested in an Eppendorf 5425/R bench top centrifuge, using Annex AA of IEC 61010-2-020:2016 (3rd Ed.). The sealed rotor was shown to contain a spill.

Report Written By

Name: Ms Helen Hookway

Title: Biosafety Scientist

Report Authorised By

Name: Mrs Sara Speight

Title: Senior Biosafety Scientist

Please be aware that the use of the Royal Coat of Arms is highly restricted and cannot be copied. Please do not put the PHE logo on your website or use our name to endorse your products. Any reference to PHE needs to be approved by us before it can be used.

* Part no. will form part of catalogue number 5495 505.008

Public Health England

Public Health England
National Infection Service
Porton Down
Salisbury
Wiltshire
SP4 OJG

Certificate of Containment Testing

Containment Testing of Rotor FA-18x2-KIT* in an Eppendorf 5425/R Bench Top Centrifuge

Report No. 17/016 D

Report Prepared For: Eppendorf AG, Hamburg, Germany

Issue Date: 10 February 2020 (reissued)

Test Summary

Rotor FA-18x2-KIT* was containment tested in an Eppendorf 5425/R bench top centrifuge, using Annex AA of IEC 61010-2-020:2016 (3rd Ed.). The sealed rotor was shown to contain a spill.

Report Written By

Name: Ms Helen Hookway

Title: Biosafety Scientist

Report Authorised By

Name: Mrs Sara Speight

Title: Senior Biosafety Scientist

Please be aware that the use of the Royal Coat of Arms is highly restricted and cannot be copied. Please do not put the PHE logo on your website or use our name to endorse your products. Any reference to PHE needs to be approved by us before it can be used.

* Part no. will form part of catalogue number 5495 508.007

Public Health England

Public Health England
National Infection Service
Porton Down
Salisbury
Wiltshire
SP4 OJG

Certificate of Containment Testing

Containment Testing of Rotor FA-24x2 with spring-loaded lid construction (including a shortened seal) in an Eppendorf 5425 Bench Top Centrifuge for use in Bench Top Centrifuges 5425 /R

Report No. 19/081

Report Prepared For: Eppendorf AG, Hamburg, Germany

Issue Date: 15 April 2020

Test Summary

Rotor FA-24x2 (5495HL303272) and with spring-loaded lid construction (including a shortened seal) was containment tested in an Eppendorf 5425/R bench top centrifuge, using Annex AA of IEC 61010-2-020:2016 (3rd Ed.). The sealed rotor was shown to contain a spill.

Report Written By

Name: Ms Helen Hookway

Title: Biosafety Scientist

Report Authorised By

Name: Mrs Sara Speight

Title: Senior Biosafety Scientist

Please be aware that the use of the Royal Coat of Arms is highly restricted and cannot be copied. Please do not put the PHE logo on your website or use our name to endorse your products. Any reference to PHE needs to be approved by us before it can be used.

Evaluate Your Manual

Give us your feedback.
www.eppendorf.com/manualfeedback

Eppendorf SE
Barkhausenweg 1
22339 Hamburg
Germany

Your local distributor: www.eppendorf.com/contact
eppendorf@eppendorf.com · www.eppendorf.com