Technical data

VISULAS YAG III laser system

Wavelength of therapy beam	1064 nm		
Focus shift between aiming beam and therapy beam	Posterior: +150 µm Zero: 0 µm Anterior: -150 µm Tolerance: ± 25 µm		
Mode	Super Gaussian		
Pulse length	< 4 ns (typically 2 ns to 3 ns)		
Pulse mode	Energy (typ.)	Max. pulse repetition rate	Burst frequency
1 (single pulse)	9.0 to 13.0 mJ	2.5 Hz (5 shots/2 s)	-
2 (double pulse)	18.0 to 28.0 mJ	1 Hz (1 shot/2 s)	33 kHz
3 (triple pulse)	29.0 to 45.0 mJ	0.5 Hz (1 shots/2 s)	33 kHz
Energy attenuation	22 levels: 2/4/6/8/10/12/14/16/20/24/28/32/36/40/42/48/56/60/64/70/80/100 % Transmission		
Focus diameter	10 µm in air		
Angle of exit aperture (divergence)	16° (round angle)		
Aiming beam	Wavelength: 660 nm to 680 nm Power: max. 150 µW 4-point aiming beam system for focusing		
NOHD	2 m		
Rated voltage; frequency	100 V to 240 V ± 10 %; 50 Hz/60 Hz		
Rated current	Max. 1.4 A to 0.7 A, transient max. 2.8 A (< 1 s)		
Fuses	2x T 3.15 AE, 5 x 20 mm in accordance with IEC 60127		
Protection class	I		
Protection mode	IP 20		
Instrument type	B (in accordance with DIN EN 60601-1)		
Dimensions of laser console (H x W x D)	135 mm x 210 mm x 330 mm		
Laser console weight	4 kg		

Pos. Item	Bestell-Nr. Order no.	Benennung	Designation	Seite Page
1	000000-1263-546	AFBG LASERKOPFSTEUERUNG YAG III	YAG III Laser head control PCB	10
2		DIN 433- 1,7-A1	DIN 433- 1,7-A1	
3		ISO 4762-M 1,6 X10-A2-70	ISO 4762-M 1,6 X10-A2-70	
4	000000-1374-008	FBG-Zielstrahl YAG III, geklebt	YAG III aiming beam PCB, cemented	
5		ISO 4762-M 2 X 5-A2-70	ISO 4762-M 2 X 5-A2-70	
6		DIN 433- 2,2-A1	DIN 433- 2,2-A1	
7	000000-1268-678	Energiemessung YAG III	YAG III energy meter	12
8	000000-1132-537	Energieabschwächer	Energy attenuator	
9	000000-1285-508	Fokusschift mit Zwangsfuehrung	Focus shift	
10		ISO 4762-M 3 x 8-A2-70	ISO 4762-M 3 x 8-A2-70	
11		ISO 4762-M 3 x 12-A2-70	ISO 4762-M 3X12-A2-70	
12	000000-1341-223	Minilaser YAGIII in Verpackung	YAGIII minilaser Typ II in packaging	14
13		ISO 4762-M 3 X45-A2-70	ISO 4762-M 3 X45-A2-70	
14		DIN 125-A 3,2-A2	DIN 125-A 3.2-A2	
15		Druckfed. 1,2x4,8x20,5 VD-180X -Gutek.	Compression Spring 1,2x4,8x20,5 VD-180X	
16	000000-1261-221	FBG BLITZLAMPENVERSORGUNG YAG III	YAG III Flash lamp supply PCB	
17	000000-1265-475	Diodenscheibe	Mounting plate	
18		ISO 4762-M 2 X 8-A2-70	ISO 4762-M 2 X 8-A2-70	
~	000000-1241-321	Laserkopfsteuerung-Energie YAG III	YAG III laser head control-energy cable	
~	000000-1293-896	Kabel Focusshift YAGIII	YAGIII focus shift cable	
~	000000-1241-315	Laserkopfsteuerung-Zielstrahl YAG III	Laser head control-aiming beam cable	
~	000000-1241-304	Laserkopfsteuerung-Zündung YAG III	YAGIII laser head control-ignition cable	

YAG III laser head, complete

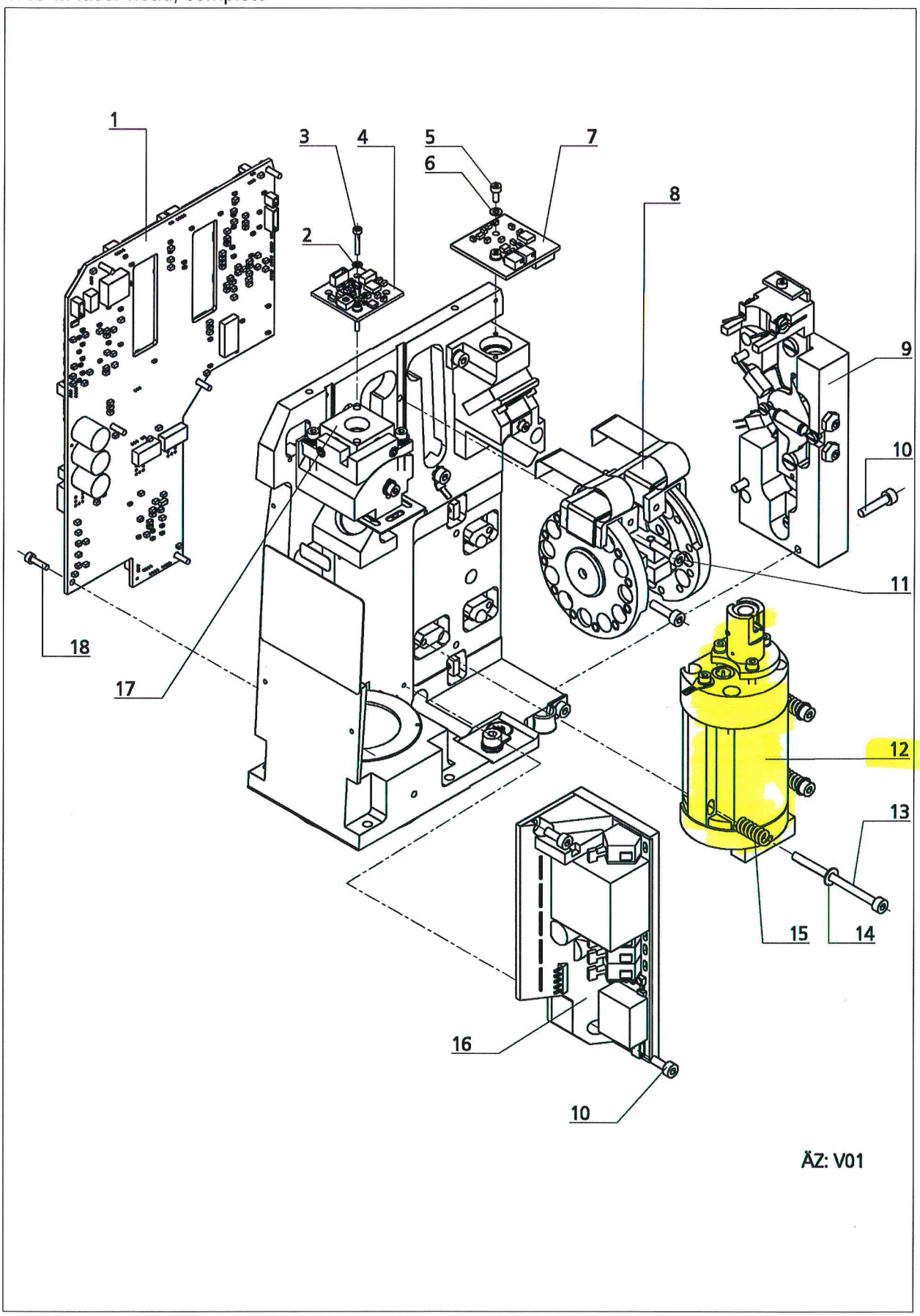

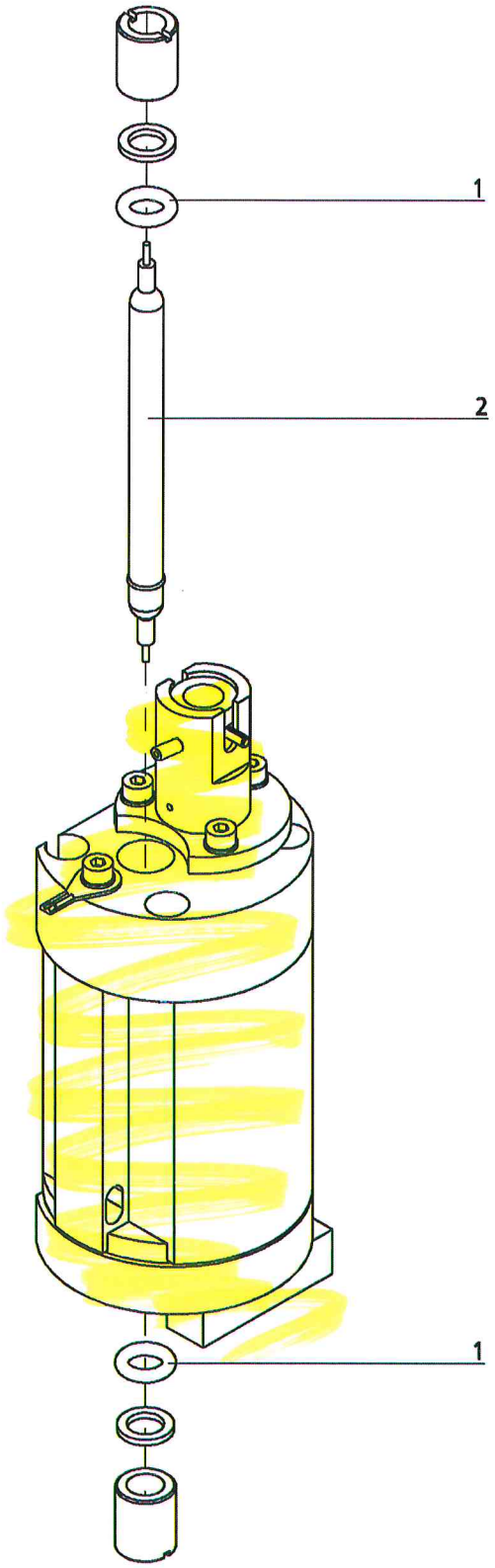

ÄZ: V02