the world of medin®

products.

Giving future...

medin®
A Hamilton Medical Company

For a good start in life –

highest quality standards and reliability.

The first breaths, immediately after birth, are important and the fundamental pre-condition for an optimal start in an independent and successful life. With its nCPAP products our company supports the spontaneous breathing of newborns and premature babies. The work of breathing is substantially reduced. nCPAP can reduce WOB, enhances FRC, improves compliance and can help to reduce RDS.

Furthermore our nCPAP system can be used after a mechanical ventilation to facilitate weaning from the respirator. Our products monitor and support the natural spontaneous breathing of the patient (1),(2),(3),(4).

All systems and products are developed and manufactured in Germany. As in-house development, our products are protected by patents and utility patents. We serve our products to the international market through our distributors. We offer an international approach, which is national adaptable with our help.

(1) Clinical practice Noninvasive respiratory support in newborns, J. Peter de Winter & Machteld A. G. de Vries & Luc J. I. Zimmermann, Eur J Pediatr (2010) 169:777–782; DOI 10.1007/s00431-010-1159-x
(2) Saunders RA, Milner AD, Hopkin IE. The effects of continuous positive airway pressure on lung mechanics and lung volumes in the neonate. Biol Neonate 1976; 29: 178-86
(3) Mahmoud RA, et al. Current methods of non-invasive ventilator support for neonates. Paediatr. Respir. Rev. (2011), doi:10.1016/j.prrv.2010.12.001
(4) Pandit PB et al.; Work of Breathing During Constant- and Variable-Flow Nasal Continuous Positive Airway Pressure in Preterm Neonates; Pediatrics Vol. 108 No. 3 September 1, 2001; pp. 682 -685 (doi: 10.1542/peds.108.3.682)

The world of medin® –

CPAP systems for premature infants & newborns.

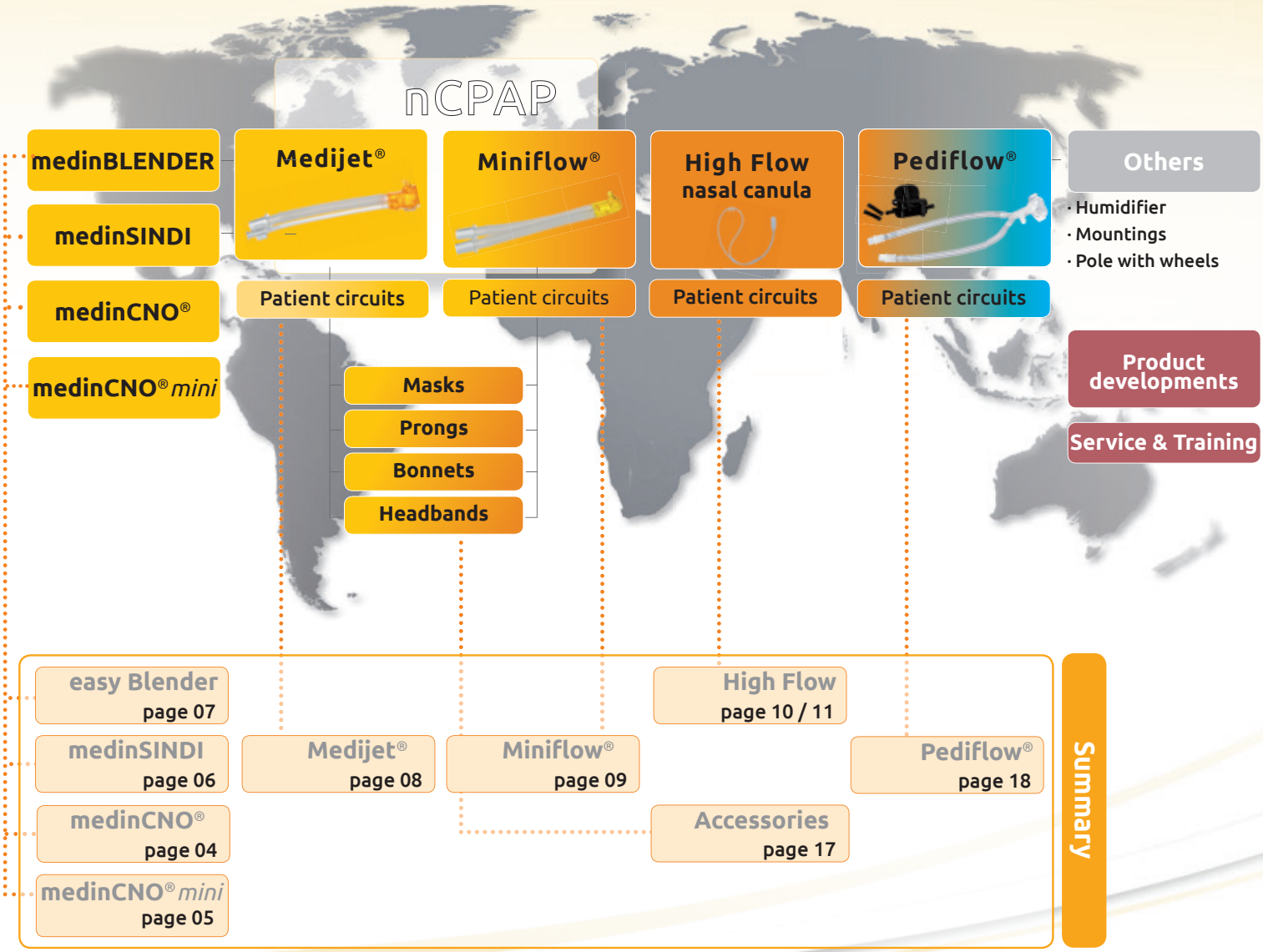

medinCNO®

[medin® CPAP devices]

REF 3090

The first device worldwide with nCPAP, Apnea nCPAP, SNIPPV and nasal high frequency ventilation in combination.

medinCNO® is used as stationary nCPAP driver for the nCPAP therapy of neonates and premature infants treated in combination with the nCPAP generator Medijet® in intensive care units.
medinCNO® may only be used in combination with simultaneous and constant hemodynamic monitoring of the patient, only by trained medical personnel and only during clinical use.

- Comprehensive combination of basic nCPAP, monitoring, Synchronization bilevel nCpap and nasal high frequency ventilation
- Real Pressure Trigger
- Special Apnea Mode
- Accessories identical to medinSINDI
- Intuitive and user friendly
- Battery operating for 2h

MADE IN GERMANY

nCPAP generator Medijet®
perfect combination in use with medinCNO® driver.

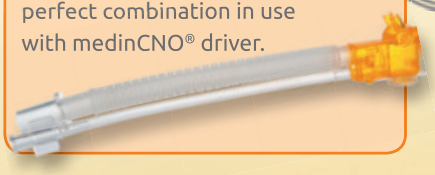

technical data & facts

Classification	IIb
Size of the device incl. connectors	29 cm x 23,5 cm x 18 cm (W x H x D)
Weight	4,75 kg
Display	7.0'' – multicolor, 800 x 480 Pixel
Shown values	· CPAP pressure · CPAP pressure curve (diagram) · Flow · Oxygen concentration · Respiration rate
Electric support	
Power supply (mains)	100-240 V AC / 50-60Hz
Battery	14,4 V DC, 2 hrs. (Bat. operation mode)
Gas supply – Air	3 – 6 bar
Gas supply – O_2	3 – 6 bar
Parameters & Sensors	
CPAP pressure	0 - 15 cm H_2O
Oxygen concentration	21% to 100% oxygen
Safety valves:	Mechanical overpressure valve Electric shut off valve
Oxygen sensor	MLF16, OOM102
Connectors	
Gas supply connectors	DISS or NIST standard
Patient gas output	M22 / F 15
Patient pressure port	Luer
Mounting	On hospital rails (10 x 25 mm)
Modes	· nCPAP with Leak Assist · Apnea monitored nCPAP with backup function and NIPPV · nasal high frequency ventilation · SNIPPV with backup function
Alarms	· Disconnection · Overpressure · High CPAP pressure (adjustable) · Low CPAP pressure (adjustable) · Oxygen concentration · Gas supply pressure air · Gas supply pressure O_2
Alarm signals	Optical, acoustical & text message
Connection to external central alarm system	Optional
Data handling	
Actual data	Shown at the display
Internal data recording	28 days
External data interface	USB, RS232 (optional)
Accessories	
Combinable nCPAP generators	Medijet® 1000, Medijet® 1010, Medijet®1020
Tube circuits	Various heated circuits for different kind of humidifiers available.

medinCNO®*mini*

REF 3080

[medin® CPAP devices]

technical data & facts

Classification	IIb
Size of the device incl. connectors	29 cm x 23,5 cm x 18 cm (W x H x D)
Weight	4,75 kg
Display	7.0'' – multicolor, 800 x 480 Pixel
Measurements	· CPAP pressure · CPAP pressure curve (diagram) · Flow · Oxygen concentration · Respiration rate
Electric support	
Power supply (mains)	100-240 V AC / 50-60Hz
Battery	14,4 V DC, 3 hrs. (Bat. operation mode)
Gas supply – Air	3 – 6 bar
Gas supply – O_2	3 – 6 bar
Parameters & Sensors	
CPAP pressure	0 - 15 cm H_20
Peak pressure	max. 18 mbar
Oxygen concentration	21% to 100% oxygen
Safety valves:	Mechanical overpressure valve Electric shut off valve
Oxygen sensor	OOM 102 MLF 16 oxygen cell (3 year interval)
Connectors	
Gas supply connectors	DISS or NIST standard
Patient gas output	M22 / F 15
Patient pressure port	Luer
Mounting	On hospital rails (10 x 25 mm)
Modes	· nCPAP with Leak Assist · Apnoea monitored nCPAP with backup function · NIPPV · High Flow
Trigger	Pressure trigger based on the CPAP pressure sensitivity +/- 0.2 to +/- 2.0 mbar (in 0.1 mbar steps)
Alarms	· Disconnection · Overpressure · High CPAP pressure (adjustable) · Low CPAP pressure (adjustable) · Oxygen concentration · Gas supply pressure air · Gas supply pressure O_2
Alarm signals	Optical, acoustical & text message
Connection to external central alarm system	Optional
Data handling	
Actual data	Shown at the display
Internal data recording	28 days
External data interface	USB
Accessories	
Combinable nCPAP generators	Medijet® 1000, Medijet® 1010, Medijet®1020
Nasal cannulas	Suitable for the device
Tube circuits	Various heated circuits for different kinds of humidifiers available.

This device combines nCPAP, ApnoeaCPAP, NIPPV and nasal High Flow.

medinCNO®*mini* offers all basic nCPAP and nasal High Flow functions you need.

- Comprehensive combination of basic nCPAP monitoring, apnoeaCPAP, NIPPV and nasal high flow therapy
- Real pressure trigger
- Accessories identical to medinCNO
- Intuitive and user friendly
- Battery operating for 2h

nCPAP generator Medijet® perfect combination in use with medinCNO®*mini*.

MADE IN GERMANY

medinSINDI

REF 1080

[medin® CPAP devices]

technical data & facts

Classification	IIb
Size of the device incl. connectors	24cm x 21,5cm x 14,5cm (W x H x D)
Weight	2,80kg
Display	96 x 61mm – monochrome
Shown values	· CPAP pressure, digital · CPAP pressure curve (diagram) · Alarm levels, high and low · Oxygen concentration digital · Spontaneous breathing frequent
Electric support	
Power supply (mains)	100-240 V AC / 50-60Hz/ 400mA
Battery	9,6 V DC, 5 hrs. (Bat. operation mode)
Gas supply – Air	3,5 – 6 bar
Gas supply – O_2	3,5 – 6 bar
Parameters & Sensors	
CPAP pressure	0 - 10 cm H_2O
Oxygen concentration	21% to 100% oxygen
Safety valves:	Mechanical overpressure valve (80cm H_2O)
Oxygen sensor	MLF16, OOM102
Modes	· CPAP
Alarms	· Disconnection · Overpressure · High CPAP pressure (adjustable) · Low CPAP pressure (adjustable) · Oxygen concentration · Gas supply pressure air · Gas supply pressure O_2
Alarm signals	Optical, acoustical and text message
Connection to external central alarm system	Optional
Data handling	
Internal data recording	8 hours
Data interface	RS 232
Accessories	
Combinable nCPAP generators	Medijet® 1000, Medijet® 1010, Medijet®1020

The long term approved solution with monitoring unit.

The medinSINDI is a universal gas delivery unit.
It can be used with and without any power.

- Display of nCPAP pressure in analogue curve and digital form
- Display of oxygen concentration in bargraph and digital form
- Display spontaneous breathing frequency in blinking and digital form
- Display of flexible setting upper and lower alarm for nCPAP pressure
- Resets alarms – mute 2 minutes or quit
- Disconnection alarm for nCPAP (if patient is lower than 1,5 cm H_2O)
- Integrated service software
- Battery operating for about 5 hrs. (incl. charging control)
- FiO_2 Trend
- Manual push ventilation with REF SMPV

MADE IN GERMANY

nCPAP generator Medijet®
perfect combination in use with medinSINDI.

medin®Blenders

medin® blenders are an easy system for oxygen therapy as well as for easy set-ups for nCPAP.

The biggest difference compared to the other devices is, that there is no electronical feedback about parameters like CPAP pressure or breathing frequency. There are different variations:

Blender as single unit.

The blender as a single unit combined with a screwable flowmeter (15 lpm). The connection to the circuit is a tapped outlet converter.

REF 1085_15

Blender with flowmeter.

The blender is mounted together with two flowmeters (0-3,5 /0-15 lpm). This connection to the circuit is a 22M or tapped connector.

REF 1090

Bubbler

The Bubble CPAP system is an easy and cheap solution to combine a blender with a mechanical CPAP valve (adjustable from 0.5 to 9.5 mbar).

REF 2040

medin® Bubble System

medin® created a basic nCPAP device and easy to use for nCPAP therapies.
We combined our existing well known easy blender (REF 1085_15) with a bubble valve (REF 2040).
With this Bubble valve you are able to adjust the nCPAP pressure between 0 and 9,5 mbar at 7 lpm.
By using it in combination with our Miniflow® as a patient interface you will get all the benefit of fixation of the medin® product range!

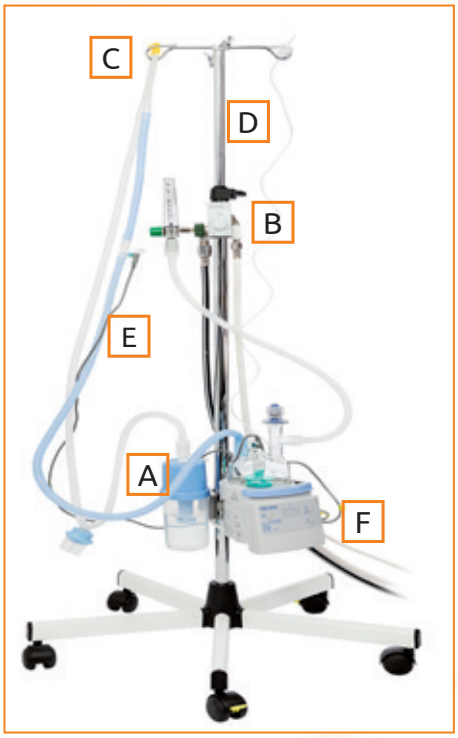

Accessories:

A) Bubbler (REF 2040)
B) Blender (REF 1085_15)
C) Miniflow (REF 4000)
D) Wheelstand (REF 5001)
E) Circuit (REF 206746 or REF 206748)
F) Humidifier
Pole clamp (for Blender): REF 900MR170
Dual pole clamp (for Bubble column and humidifier): REF 20CL02

We recommend using always a water column (REF 1050) or a digital Manometer (0-30mbar REF 1026) in combination with the blenders.

REF 1026

REF 1050

Medijet®

[Active/ Variable flow generator]

REF 1000

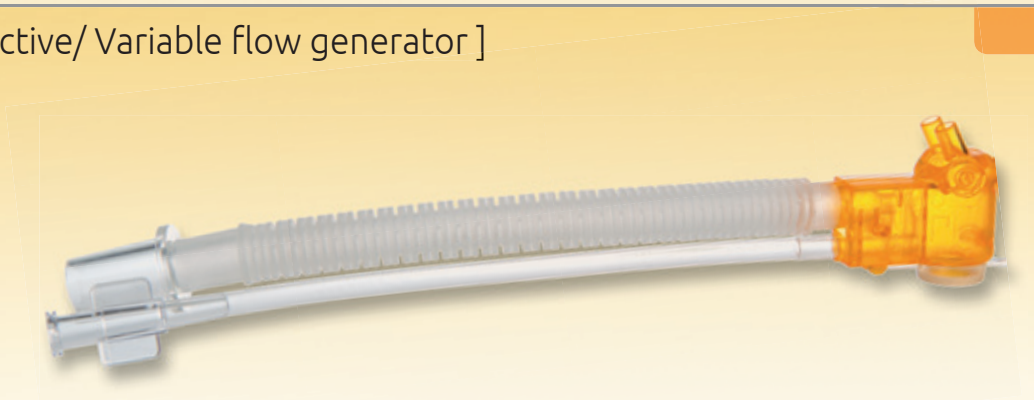

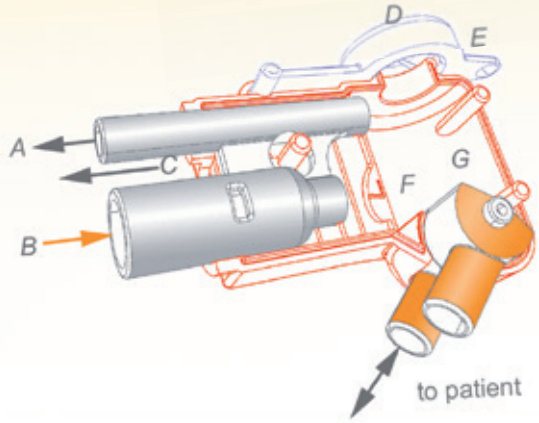

Advantages of the nCPAP Medijet® Generator:

- Increase of FRC and improvement of compliance (1), (2)
- Reduction of work of breathing (3), (4)
- Low noise level (5)
- Benveniste princip (6) with volume reservoir, prenasal pressure measurement + non-aggressive flow application
- Perfect combination in use with medinCNO® driver

CPAP should be easy, inexpensive and safe!

functions

A) nCPAP measurement
B) Driveflow inlet
C) Driveflow outlet
D) Drug nebulizer port or
E) Cap for close down
F) Benveniste Valve
G) Volume reservoir

technical data & facts

Connectors	Flow and pressure
Working principle	Benveniste valve
CPAP level setting	0 to 10 cm H_2O
Noise level 5 cm H_2O	61dB (A)
Volume reservoir ml	4 ml - constant flush
Drug inhalation port	6,0 ID
Nasal connector 45° and 60°	Changeable
Packing unit	20

The Medijet® is also available as a reusauble version. The nasal connector is not adjustable, therefore two different versions (45° = REF 1020 and 60° = REF 1010).

REF 1010

REF 1020

(1) Clinical practice Noninvasive respiratory support in newborns, J. Peter de Winter & Machteld A. G. de Vries & Luc J. I. Zimmermann, Eur J Pediatr (2010) 169:777–782; DOI 10.1007/s00431-010-1159-x

(2) Saunders RA, Milner AD, Hopkin IE. The effects of continuous positive airway pressure on lung mechanics and lung volumes in the neonate. Biol Neonate 1976; 29: 178-86

(3) Mahmoud RA, et al. Current methods of non-invasive ventilator support for neonates. Paediatr. Respir. Rev. (2011), doi:10.1016/j.prrv.2010.12.001

(4) Pandit PB et al.; Work of Breathing During Constant- and Variable-Flow Nasal Continuous Positive Airway Pressure in Preterm Neonates; Pediatrics Vol. 108 No. 3 September 1, 2001; pp. 682 -685 (doi: 10.1542/peds.108.3.682)

(5) Kirchner L. et al.; In vitro comparison of noise levels produced by different CPAP generators; Neonatology 2012; 101 (2):95-100 Epub 2011 Sep 17

(6) Benveniste D. et al.; A technique for delivers of continuous positive airway pressure to the neonate. J Pediatr 1976; 88: 1015-9.

Miniflow®

REF 4000

[Nasal nCPAP-generator]

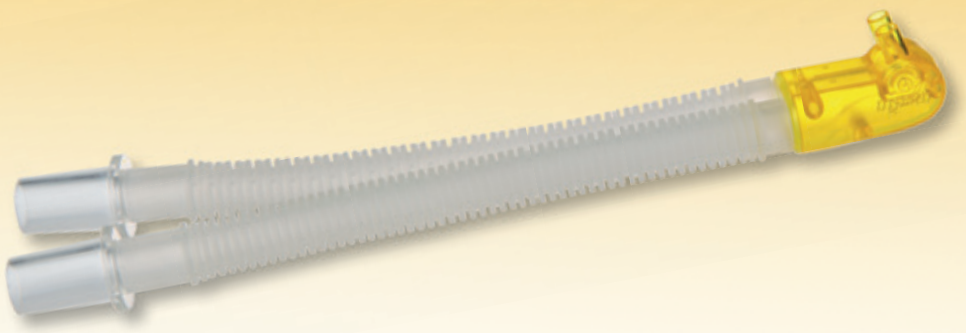

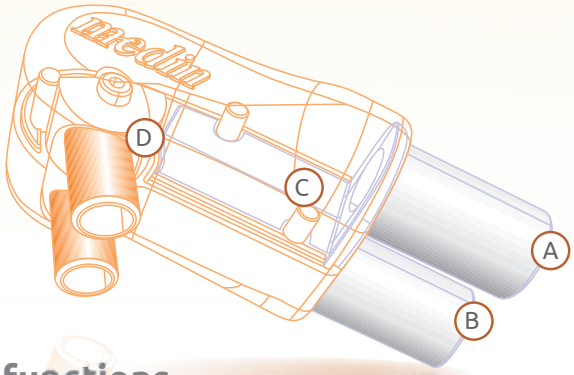

functions

A) Inspiration
B) Expiration
C) Separation wall
D) Flexible prong adapter

Miniflow® is a patient interface for the CPAP mode of ventilators. Miniflow® can therefore be connected to the inspiration and expiration tubes and thus to the ventilator. The ventilator adjusts and controls the CPAP parameter and provides the necessary gas flow.

You can connect the Miniflow® to the inspiration and the expiration tube, if your ventilator needs an external pressure measurement, add the T-piece into this connection (REF 4010).

Advantages of the nCPAP Miniflow® Generator:

- Minimal dead space
- Separation of inspiration- and expiration-gases
- Compatible with Medijet® accessoires
- Reduction of work of breathing (1)
- Flexible prong adapter for best position
- Simple use

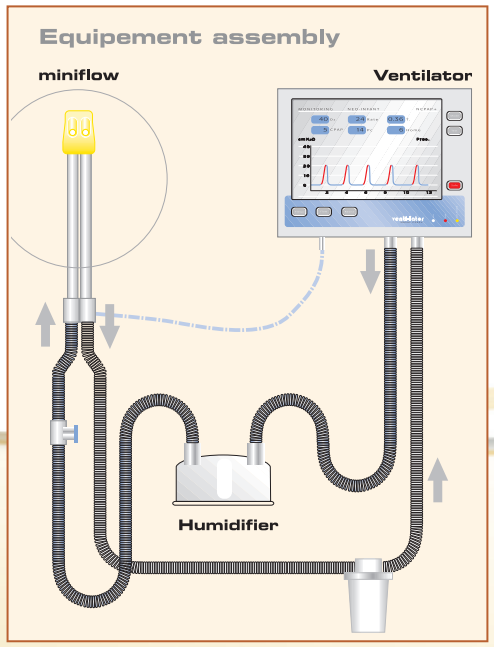

- **nCPAP generator Miniflow®**
  - · Always use the largest prong to avoid leakage!
  - · Switch between prong and mask after some hours!
  - · Insert the prong only halfway into the nose!

IMPORTANT:
Single use product for a single patient only!

(1) Work of Breathing during Nasal Continuous Positive Airway Pressure in Preterm Infants; Ellina Lipsten et al. Journal of Perinatology 2005; 25:453–458

medin High Flow Concept

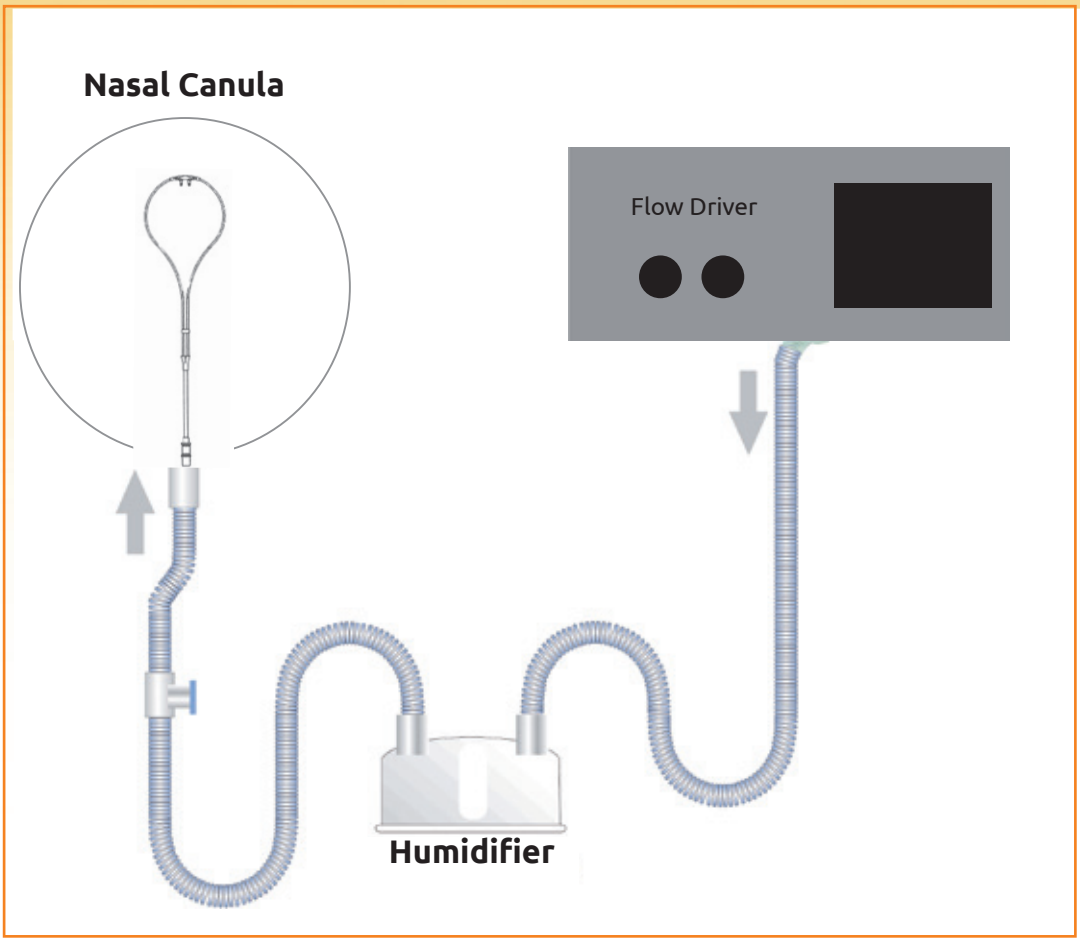

1. Low Resistance Version

medin is offering a low resistance nasual canula, which can be used with medinSINDI or medinBLENDER. This product can also be used with other flow drivers.

REF	QTY	Name	Size	Flow rate
1390	3/size	Set with three products (premature, neonatal, peadiatric)	all three	depends on size

2. Simple Version

medin is offering cheap models of nasal canulas, which can be used with nearly every flow source (e.g. medinBLENDER).

REF	QTY	Name	Size	Flow rate
1300	10	Oxygen Nasal Canula 0	0	0-4 l/min.
1301	10	Oxygen Nasal Canula 0.5	0.5	0-4 l/min.
1302	10	Oxygen Nasal Canula 1	1	0-7 l/min.
1391	5/size	Set with five products	5/size	depends on size

- We recommend using a humidifier to reduce the discomfort of the baby.
- We recommend using an overpressure valve for safety of the baby.

How to find your System

Nasal canula

medin OXYGEN nasal canula
1300 / 1301 / 1302 / 1391

medin Comfort Soft plus
1390

medinBLENDER
1090 / 1085_15

medinSINDI
1080

Overpressure valve
51070

HUMIDIFIERS

Heated circuit
1207 / 1207MKI

Masks and Prongs

[Medijet® · Miniflow®]

Masks

REF see table >>

The masks have to be used in combination with the Medijet® or the Miniflow®. All masks are made of silicone. For choosing the correct size use the medin® measuring tape.

technical data & facts

Size	x-small	small	medium	large	x-large
REF	1200-08	1200-04	1200-05	1200-06	1200-07
Mask width nose [mm]	14	18,5	21,0	23,0	26,0
Packaging unit	10	10	10	10	5

Prongs

REF see table >>

The prongs have to be used in combination with the Medijet® or the Miniflow®. All prongs are made of silicone. For choosing the correct size use the medin® measuring tape.

technical data & facts

Size	x-small	small	medium	large	x-large	medium wide	large wide
REF	1200-01	1200-21	1200-02	1200-22	1200-03	1200-32	1200-33
Nostril Ø [mm]	3	3,5	4,1	4,75	5,5	3,7	5
Packaging unit	10	10	10	10	10	10	10

Bonnets

Bonnets · Disposable

REF see table >>

The bonnets are the most important connection to the baby.
Only with these bonnets you can realize a perfect fixation of the prongs and masks. There are different sizes available. The correct size is measured by our measuring tape (REF 2150). Material: 95% Polyamid, 5% Elastan

technical data & facts

Size	XXS	XS	S	M	L	XL	XXL	XXXL
REF	1213-10	1214-10	1215-10	1216-10	1217-10	1218-10	1219-10	1220-10
Head circumference [cm]	17 - 19	19 - 21	21 - 23	23 - 25,5	25,5 - 28	28 - 30	30 - 33	33 - 36
Packaging unit	10	10	10	10	10	10	10	10

Bonnets · Reusable

REF see table >>

technical data & facts

Size	XS	S	M	L	XL	XXL	XXXL	XXXXL
REF	1214	1215	1216	1217	1218	1219	1220	1221
Head circumference [cm]	19 - 21	21 - 23	23 - 25,5	25,5 - 28	28 - 30	30 - 33	33 - 36	36 - 40
Packaging unit	1	1	1	1	1	1	1	1

Fixation pillow

REF 2018

Fixes the generator more stable on the cap

Packaging unit	10

Measuring tape

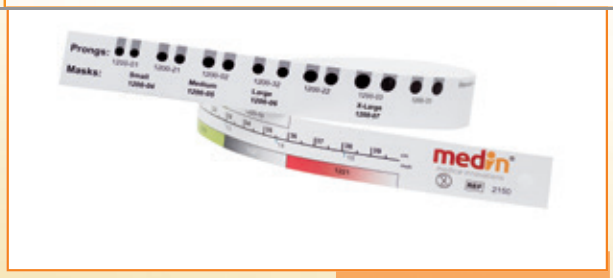

REF 2150

The measuring tape is the best way to choose the correct size.

Packaging unit	20

Circuits Medijet®

Circuits							
REF	Name	Diameter connectors	Inspiration/ expiration	Additional connectors	Heated	Accessories	Single use/ reuse
1202	Patient circuit	M15/ M7,4	Inspiration	n/a	No	No	Single use
1205	Patient circuit	F22/M7,4	Inspiration	n/a	No	No	Single use
1207	Patient circuit	F22/F22 and F22/M7,4	Inspiration	M15/M15	Yes - for F&P 850	No	Single use
1207 MKI	Patient circuit	F22/F22 and F22/M7,4	Inspiration	M15/M15	Yes - for F&P 850	Chamber	Single use
1210	Patient circuit	F22/F22 and F22/M7,4	Inspiration	n/a	No	No	Single use

■ Medijet®

All single use circuits contain a pressure line.

Circuits Medijet®

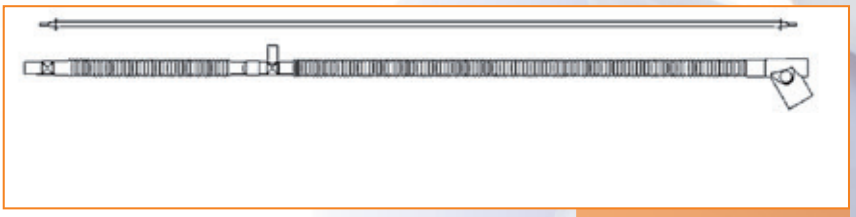

REF 1202

REF 1205

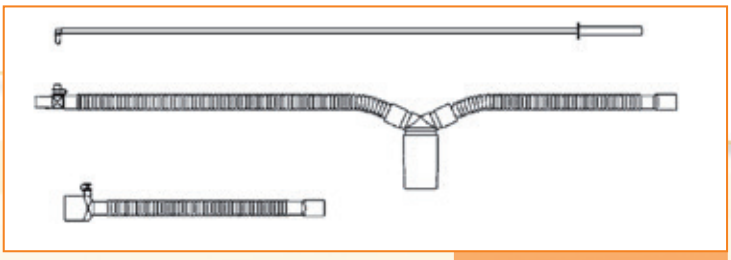

REF 1210

REF 1207

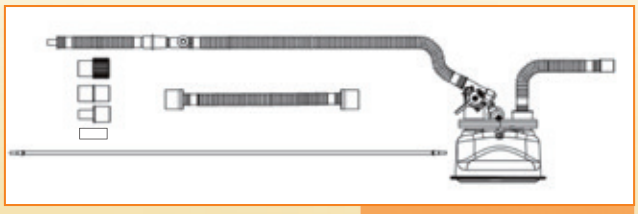

REF 1207MKI

Circuits							
REF	Name	Diameter connectors	Inspiration/ expiration	Additional connectors	Heated	Accessories	Single use/ reuse
206746	Patient circuit	2 x F22/F10 and F22/F22	Inspiration and Exp.	3 x M22/M15	Yes (inspiratory)	Water trap / chamber	Single use
206748	Patient circuit	2 x F22/F10 and F22/F22	Inspiration and Exp.	3 x M22/M15	Yes (inspiratory)	Water trap	Single use
2239	Pressure line	M4,3/M4,3	n/a	n/a	No	No	Reusable

Miniflow®

All single use circuits contain a pressure line.

Circuits Miniflow®

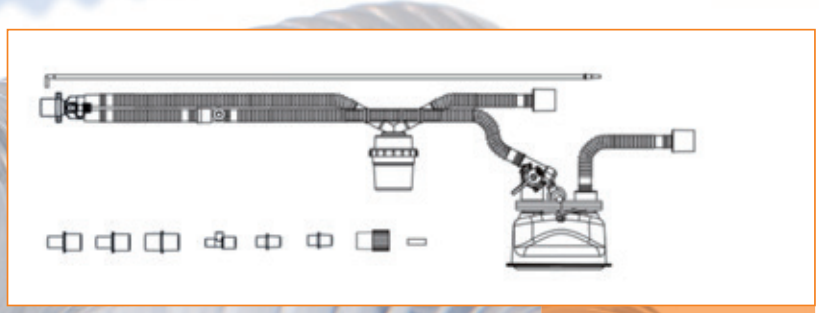

REF 206746

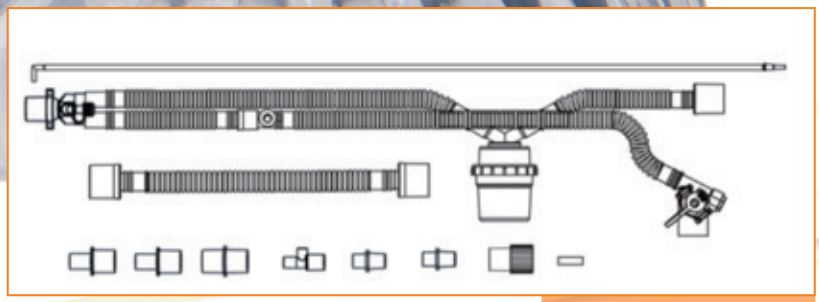

REF 206748

Sets

medin® offers different sets for Medijet® and Miniflow®. These sets combine our generator, masks, prongs and bonnets in different sizes. Some of the sets also have circuits.
A set makes it easier to start nCPAP therapy. The different sizes can be tried and afterwards the respective sizes can be ordered.

Sets Medijet®

1000-10			1000-20			1000-30*			1000-11*		
Pcs.	Article/ Size	REF	Pcs.	Article/ Size	REF	Pcs.	Article/ Size	REF	Pcs.	Article/ Size	REF
10 x	Medijet® 1000	1000	20 x	Medijet® 1000	1000	20 x	Medijet® 1000	1000	10x	Medijet® 1000	1000
1 x	Prong/ x-small	1200-01	10 x	Prong/ x-small	1200-01	2 x	Prong/ x-small	1200-01	1x	Prong/ x-small	1200-01
2 x	Prong/ small	1200-21	10 x	Prong/ small	1200-21	4 x	Prong/ small	1200-21	2x	Prong/ small	1200-21
2 x	Prong/ medium	1200-02	10 x	Prong/ medium	1200-02	4 x	Prong/ medium	1200-02	2x	Prong/ medium	1200-02
2 x	Prong/ large	1200-22	10 x	Prong/ large	1200-22	4 x	Prong/ large	1200-22	1x	Prong/ medium wide	1200-32
1 x	Prong/ x-large	1200-03	10 x	Prong/ x-large	1200-03	4 x	Prong/ x-large	1200-03	2x	Prong/ large	1200-22
1 x	Prong/ medium wide	1200-32	10 x	Prong/ medium wide	1200-32	1 x	Prong/ medium wide	1200-32	1x	Prong/ x-large	1200-03
1 x	Prong/ large wide	1200-33	10 x	Prong/ large wide	1200-33	1 x	Prong/ large wide	1200-33	1x	Prong/ large wide	1200-33
1 x	Mask/ small	1200-04	10 x	Mask/ small	1200-04	2 x	Mask/ small	1200-04	1x	Mask/ small	1200-04
1 x	Mask/ medium	1200-05	10 x	Mask/ medium	1200-05	4 x	Mask/ medium	1200-05	1x	Mask/ medium	1200-05
1 x	Mask/ large	1200-06	10 x	Mask/ large	1200-06	3 x	Mask/ large	1200-06	1x	Mask/ large	1200-06
1 x	Mask/ x-large	1200-07	10 x	Bonnet/ x-small	1214-10	1 x	Mask/ x-large	1200-07	1x	Mask/ x-large	1200-07
1 x	Bonnet/ xx-small	1213-10	10 x	Bonnet/ small	1215-10	1 x	Bonnet/ x-small	1214-10	1x	Strip lenth 15cm	1212-15
1 x	Bonnet/ x-small	1214-10	10 x	Bonnet/ medium	1216-10	2 x	Bonnet/ small	1215-10	1x	Bonnet/ xx-small	1213-10
1 x	Bonnet/ small	1215-10	10 x	Bonnet/ large	1217-10	4 x	Bonnet/ medium	1216-10	1x	Bonnet/ x-small	1214-10
2 x	Bonnet/ medium	1216-10	10 x	Bonnet/ x-large	1218-10	4 x	Bonnet/ large	1217-10	1x	Bonnet/ small	1215-10
2 x	Bonnet/ large	1217-10	10 x	Bonnet/ xx-large	1219-10	4 x	Bonnet/ x-large	1218-10	2x	Bonnet/ medium	1216-10
1 x	Bonnet/ x-large	1218-10	10 x	Bonnet/ xxx-large	1220-10	4 x	Bonnet/ xx-large	1219-10	2x	Bonnet/ large	1217-10
1 x	Bonnet/ xx-large	1219-10	1 x	Measuring tape	2150	1 x	Bonnet/ xxx-large	1220-10	1x	Bonnet/ x-large	1218-10
1 x	Bonnet/ xxx-large	1220-10	10 x	Fixation pillow	2018	20 x	Patient circuit	1207	1x	Bonnet/ xx-large	1219-10
1 x	Measuring tape	2150				1 x	Measuring tape unit	2150	1x	Bonnet/ xxx-large	1220-10
10 x	Fixation pillow	2018				10 x	Fixation pillow	2018	10x	Pressure Peak Reducer	2015
									1 x	Measuring tape	2150
									1x	Fixation Pillow	2018

* Minimum order quantity: 5 units

Sets Miniflow®

4000-10					
Pcs.	Article/ Size	REF			
10 x	Miniflow®	4000			
1 x	Prong/ x-small	1200-01			
2 x	Prong/ small	1200-21			
2 x	Prong/ medium	1200-02			
2 x	Prong/ large	1200-22	1x	Bonnet/ xx-small	1213-10
1 x	Prong/ x-large	1200-03	1x	Bonnet/ x-small	1214-10
1 x	Prong/ medium wide	1200-32	1x	Bonnet/ small	1215-10
1 x	Prong/ large wide	1200-33	1x	Bonnet/ medium	1216-10
1 x	Mask/ x-small	1200-08	1x	Bonnet/ large	1217-10
1 x	Mask/ small	1200-04	1x	Bonnet/ x-large	1218-10
1 x	Mask/ medium	1200-05	1x	Bonnet/ xx-large	1219-10
1 x	Mask/ large	1200-06	1x	Bonnet/ xxx-large	1220-10
1x	Mask/ x-large	1200-07	1x	Measuring tape	2150

Sets Miniflow®

4000-20					
Pcs.	Article/ Size	REF			
20 x	Miniflow®	4000			
10 x	Prong/ x-small	1200-01			
10 x	Prong/ small	1200-21			
10 x	Prong/ medium	1200-02			
10 x	Prong/ large	1200-22			
10 x	Prong/ x-large	1200-03			
10 x	Prong/ medium wide	1200-32			
10 x	Prong/ large wide	1200-33			
10 x	Mask/ small	1200-04	10x	Bonnet/ medium	1216-10
10 x	Mask/ medium	1200-05	10 x	Bonnet/ large	1217-10
10 x	Mask/ large	1200-06	10 x	Bonnet/ x-large	1218-10
10 x	Bonnet/ x-small	1214-10	10 x	Bonnet/ xx-large	1219-10
10x	Bonnet/ small	1215-10	10 x	Bonnet/ xxx-large	1220-10

Accessories

Humidifiers · **HAMILTON-H900**

Respiratory humidifier with fully digital user interface for invasive and non-invasive application.

Independent of its outstanding performance specifications HAMILTON-H900 provides reasonable comfort to both user and patient:

- Integrated temperature probe
- Wall-heated, all-in-one breathing circuits
- Adjustable temperature and humidity settings
- Remote control from any compatible ventilator
- Pre-assembled and ready for use

Circuits for HAMILTON-H900 are also available. For more information please contact us.

Humidifiers · **Fisher & Paykel MR 850**

Aims to provide optimal humidity (37°C, 44 mg/L) for invasive ventilation, nonin-vasive ventilation, humidified High Flow Therapy oxygen therapy.
For more information see www.fphcare.com

Neonate chamber · Chamber

Neonate chamber - REF 203422

Wheel Stand

Wheelstand · REF 5001
Basket · REF 5010
Rail for mounting · REF 5002

Pressure Measurement

A t-piece combined with a pressure line for external pressure measurement
REF 4010

Connector

Electric Adapter for Wilamed PMH5000 to Shamrock
REF 5600

Pediflow®

[noninvasive respiratory mask for pediatrics]

REF 1400

The first breaths, immediately after birth, are important and the fundamental pre-condition for an optimal start in an independent and successful life. With its nCPAP products our company supports the spontaneous breathing of newborns and premature babies. However, we don't stop here. With our Pediflow® we went one step further and developed the non-invasive respiratory mask for pediatric patients. For an easy and perfect fixation we designed a special headgear which adapts accurately to the baby's head. It is a single-use product, which is usable in clinics or in home therapy. Nevertheless, in spite of an excellent quality, gentle material and easy usage – the price is very competitive. With our Pediflow® you can take care of pediatric patients, still using a medin® product (1), (2), (3), (4), (5).

Advantages of the Pediflow® mask:

- Usable for infants up to approx. 10kg
- Usable in clinics or in home therapy
- Soft silicone mask avoids pressure marks or even skin damage
- Reduction of work of breathing (6)
- Simple use

technical facts & data

REF	Connector Flow input/ output	Usage	Size	Packing unit
1400	7,4mm ID/ 10mm oD	Single use	One size	5

Pediflow® is usable also with our bubble system

(1) J. Peter de Winter & Machteld A. G. de Vries & Luc J. I. Zimmermann (Clinical practice, Noninvasive respiratory support in newborns)

(2) Saunders RA, Milner AD, Hopkin IE. The effects of continuous positive airway pressure on lung (mechanics and lung volumes in the neonate. Biol Neonate 1976; 29: 178-86)

(3) Mahmoud RA, et al. Current methods of non-invasive ventilator support for neonates. Paediatr. (Respir. Rev. (2011), doi:10.1016/j.prrv.2010.12.001)

(4) Pandit PB et al.; Work of Breathing During Constant- and Variable-Flow Nasal Continuous Positive (Airway Pressure in Preterm Neonates; Pediatrics Vol. 108 No. 3 September 1, 2001; pp. 682 -685 (doi:10.1542/peds.108.3.682))

(5) Deutsche Gesellschaft für Pneumologie und Beatmungsmedizin. Leitlinie - Nichtinvasive Beatmung als Therapie der akuten respiratorischen Insuffizienz. Werne: 2008

(6) Work of Breathing during Nasal Continuous Positive Airway Pressure in Preterm Infants; Ellina Lipsten et al. Journal of Perinatology 2005; 25: 453-458

How to find your System

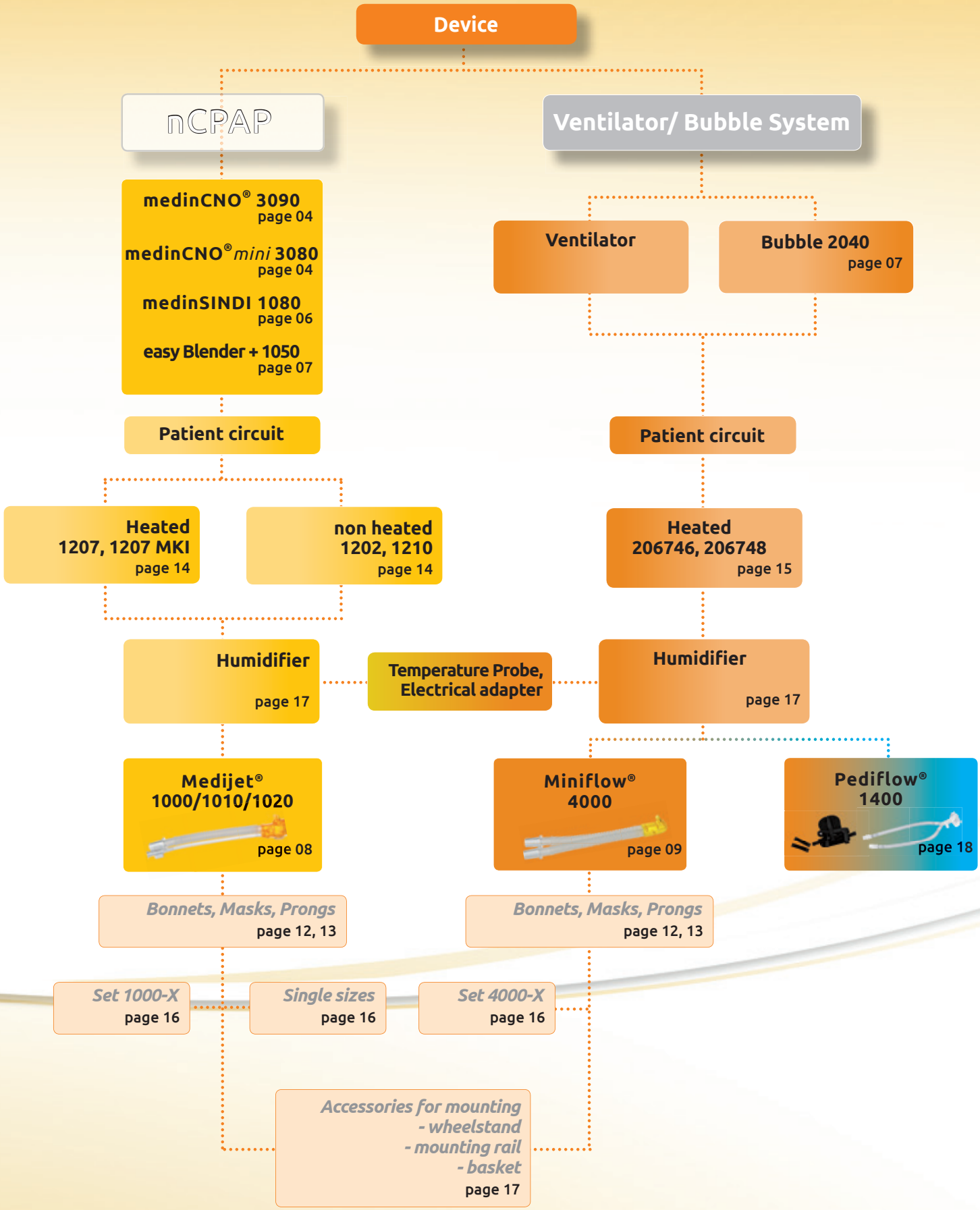

Distributors

[worldwide]

Your distributor:

Algeria · Austria · Azerbaijan · Bangladesh · Belarus · Belgium · Benin · Bosnia · Canada · Chile · China · Colombia · Costa Rica · Croatia · Egypt · Cyprus · Czech Republic · Denmark · Estonia · Finland · France · Germany · Greece · Great Britain · Hong Kong · Hungary · India · Indonesia · Iraq · Iran · Ireland · Israel · Italy · Japan · Jordan · Kazakhstan · Kenya · Kyrgystan · Korea · Kuwait · Latvia · Libya · Lithuania · Luxembourg · Macedonia · Malaysia · Malta · Marocco · Moldova · Netherlands · Nigeria · Norway · Oman · Pakistan · Peru · Poland · Portugal · Romania · Russia · Saudi Arabia · Serbia · Singapore · Slovenia · Slovakia · South Africa · Spain · Sri Lanka · Suriname · Sweden · Switzerland · Syria · Thailand · Tadzhikistan · Tunisia · Turkey · Ukraine · United Arab Emirates · Uruguay · Uzbekistan · Venezuela · Vietnam

www.medingmbh.com

A subsidiary of the Hamilton Medical AG

medin Medical Innovations GmbH
Adam- Geisler- Str. 1
D·82140 Olching

Phone: +49 8142 448 46-0
info@medingmbh.com

medin®
A Hamilton Medical Company

REV08

Subject to change without notice.