resideo Filter

Braukmann
MiniPlus FF06

Rinsable fine filter

APPLICATION

Rinsable MiniPlus FF06 fine filters ensure a continous supply of filtered water. The fine filter prevents the ingress of foreign bodies, for example rust particles, strands of hemp and grains of sand and thus reduces the probability of corrosion. Sediment collected at the bottom of the filter bowl can simply be removed by rinsing the filter.

Compact in size, these filters were designed to fit where space is limited.

APPROVALS

- DVGW

SPECIAL FEATURES

- Simple assembly
- Filtered water supplied even during reverse rinsing
- Shock resistant clear synthetic material filter bowl enables easy checking of filter contamination
- Filter and complete filter bowl are replaceable
- Body with female and male threads
- ACS certified
- All materials are KTW approved
- Approved by TÜV LGA for low noise, Group 1 without limitations

TECHNICAL DATA

Media	
Medium:	Drinking water
Connections/Sizes	
Connection sizes:	$^1/_2$" - $1^1/_4$"
Pressure values	
Max. operating pressure:	16 bar
Operating temperatures	
Max. operating temperature medium accord. to EN 1567:	30 °C AA
Specifications	
Installation position:	Horizontal with filter bowl downwards

Note: The filter is constructed for drinking water installations. In case of a process water application the filter has to be proven individually.

CONSTRUCTION

Overview

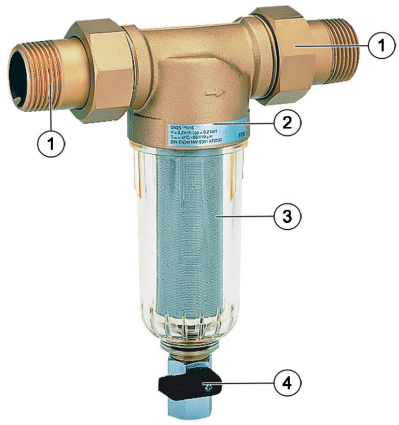

	Components	Materials
1	Threaded connections (option AA)	Brass
2	Housing with female and male threads, without threaded connection	Dezincification resistant pressed brass
3	Fine filter in clear filter bowl	Stainless steel, shock-resistant, transparent synthetic material filter bowl
4	Ball valve	Brass (Ball Valve body), Stainless steel (ball), Plastic (handle)
	Not depicted components:	
	Double wring wrench	Plastic

METHOD OF OPERATION

The fine filter is composed of a body and a rinsable fine filter insert.

During normal operation, water flows through the filter mesh to the body outlet. To rinse the filter, the ball valve is opened which discharges the dirt particles. A continous supply of filtered water is available also during the rinse cycle.

TRANSPORTATION AND STORAGE

Keep parts in their original packaging and unpack them shortly before use.

The following parameters apply during transportation and storage:

Parameter	Value
Environment:	clean, dry and dust free
Min. ambient temperature:	5 °C
Max. ambient temperature:	55 °C
Min. ambient relative humidity:	25 % *
Max. ambient relative humidity:	85 % *

*non condensing

INSTALLATION GUIDELINES

Setup requirements

- Install in horizontal pipework with filter bowl downwards
  - This position ensures optimum filter efficiency
- Install shut-off valves
- These filters are armatures which need to be maintained regularly
- Ensure good access
  - Degree of contamination can be easily seen with clear filter bowl
  - Simplifies maintenance and inspection
- The installation location should be protected against frost
- Related to the EN 806-2 it is recommended to install the filter immediately after the water meter
- In order to avoid flooding, it is recommended to arrange a permanent, professionally dimensioned wastewater connection

Installation Example

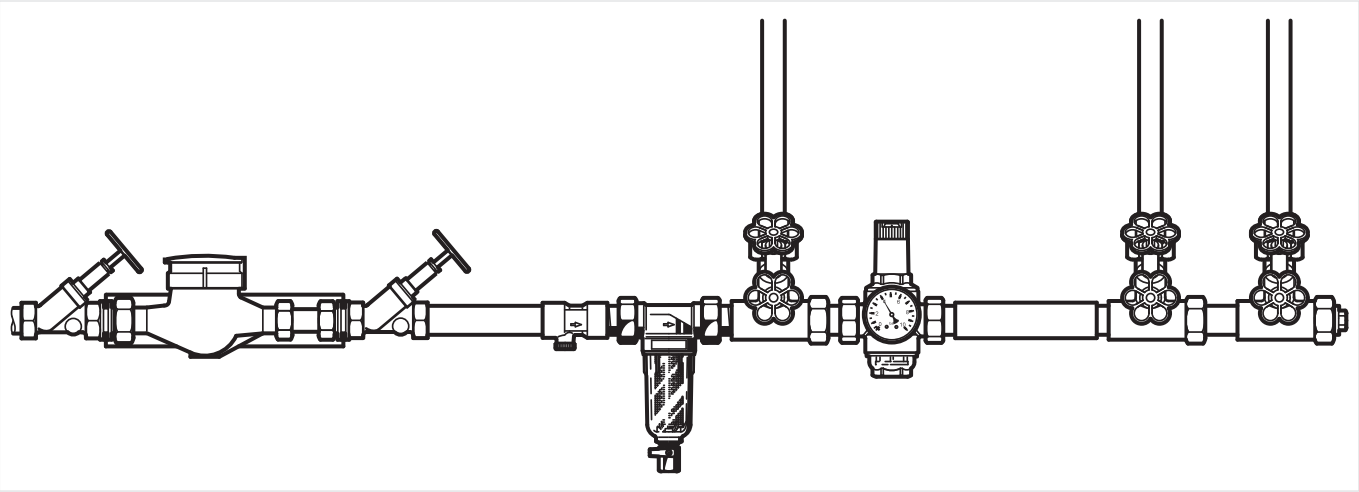

TECHNICAL CHARACTERISTICS

kvs-Values

Connection sizes:	15	20	25	32
k_{vs}-value (m^3/h):	1.8	3.2	9.5	9.5

Pressure drop characteristics

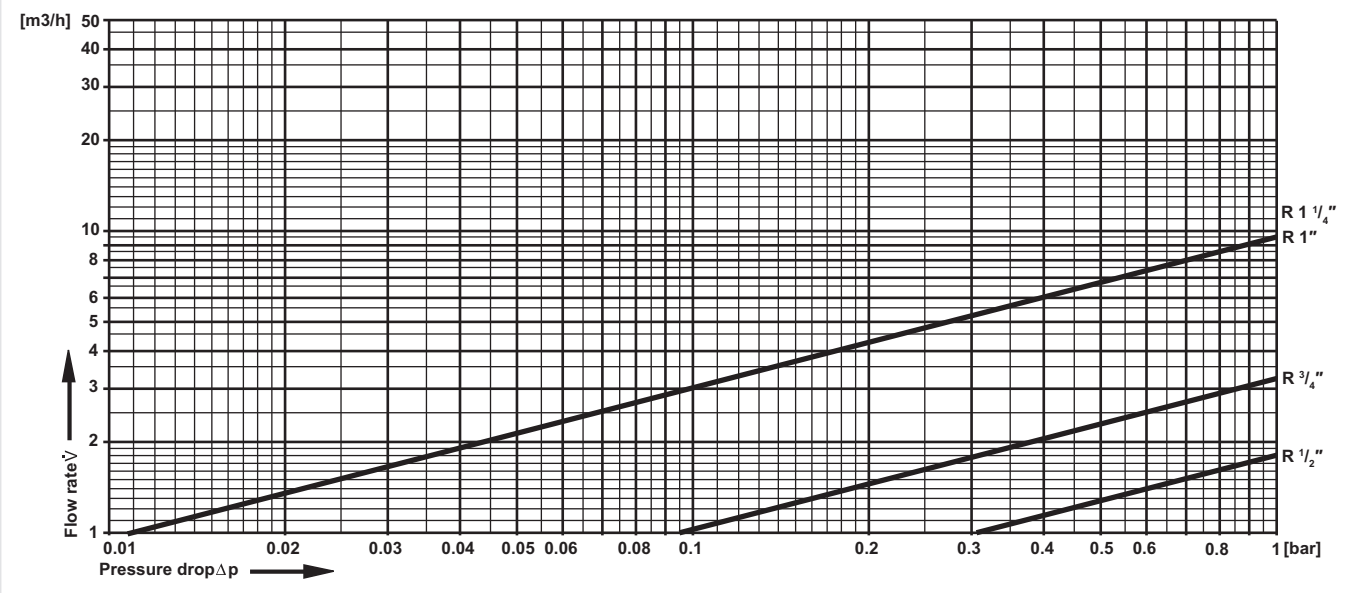

DIMENSIONS

Overview

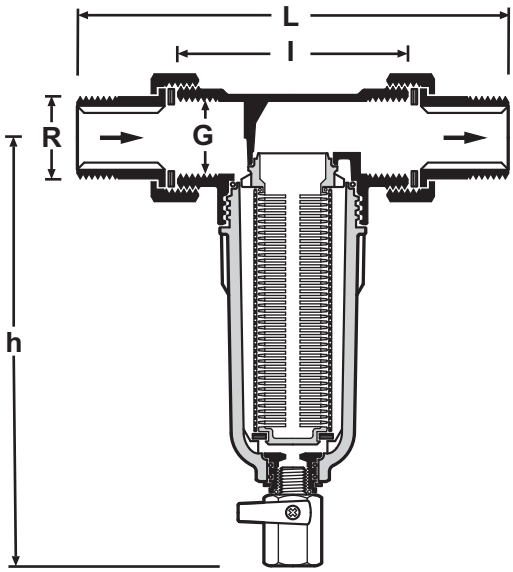

Parameter		Values			
Connection sizes:	R	1/2"	3/4"	1"	1 1/4"
Internal threads:	G	1/2"	3/4"	1"	-
Weight:	kg	0.7	1.0	1.3	1.5
Dimensions:	L	140	158	179	197
	l	80	90	100	105
	h	158	180	180	180
Flow value at Δp=0.5 bar:	m^3/h	1.27	2.27	6.7	6.7
DVGW registration number:		NW-9301CM0399		-	-

Note: All dimensions in mm unless stated otherwise.

ORDERING INFORMATION

The following tables contain all the information you need to make an order of an item of your choice. When ordering, please always state the type, the ordering or the part number.

Options

The filter is available in the following sizes: $^1/_2$", $^3/_4$", 1" and $1^1/_4$".

• standard

- not available

		FF06-...AA	FF06-...EA
Connection type:	Threaded male connections, filter mesh size 100 µm	•	-
	Without connections, filter mesh size 100 µm	-	•

Note: ... = space holder for connection size

Note: Ordering number example for 1" and type AA valve: FF06-1AA

Accessories

	Description		Dimension	Part No.
	VST06B	**Connection set** Solder connections		
			$^1/_2$"	VST06-1/2B
			$^3/_4$"	VST06-3/4B
			1"	VST06-1B
			$1^1/_4$"	VST06-11/4B
	ZR06F	**Double ring wrench** For removing filter bowl		
			$^1/_2$" - $1^1/_4$"	ZR06F

Spare Parts

MiniPlus FF06 Fine Filters from 1997 onwards

Overview

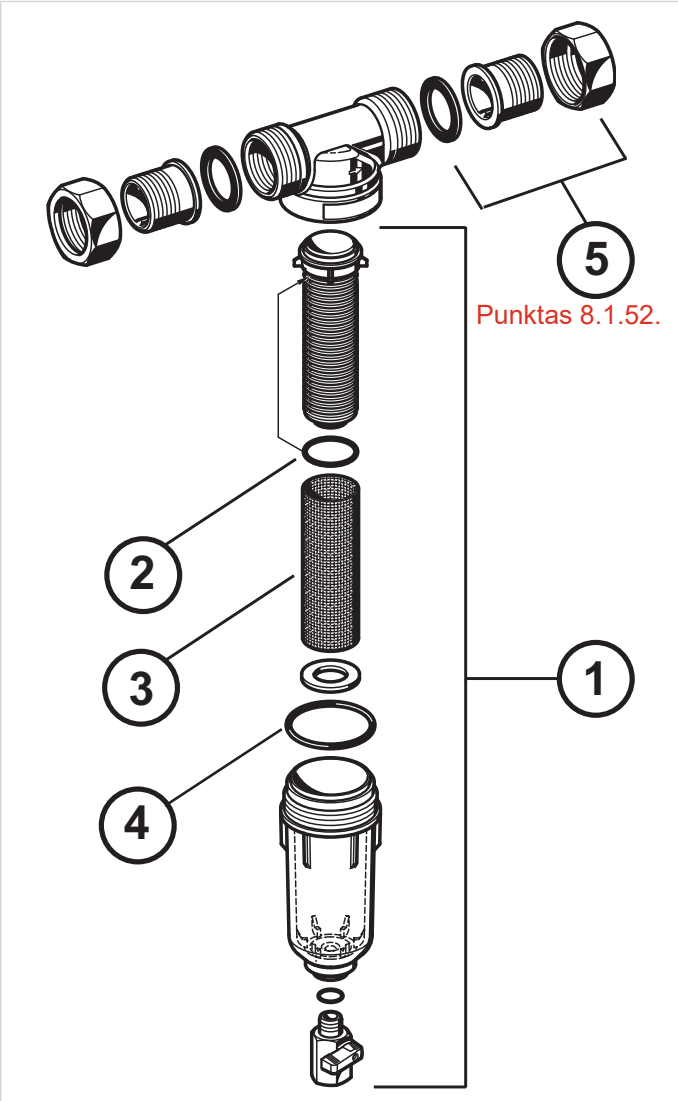

	Description	Dimension	Part No.
1	**Clear filter bowl with sieve 100 µm and mesh carrier**		
		1/2"	KF06-1/2A
		3/4" - 1 1/4"	KF06-1A
2	**O-ring set for mesh carrier (10 pcs.)**		
		1/2"	0903127
		3/4" - 1 1/4"	0903128
3	**Replacement sieve (5 pcs.)**		
	100 µm	1/2"	AS06-1/2A
	100 µm	3/4" - 1 1/4"	AS06-1A
	50 µm	1/2"	AS06-1/2C
	50 µm	3/4" - 1 1/4"	AS06-1C
4	**O-ring set for filter bowl (10 pcs.)**		
		1/2"	0901246
		3/4" - 1 1/4"	0901499
5	**Connection set threaded connection**		
		1/2"	VST06-1/2A
		3/4"	VST06-3/4A
		1"	VST06-1A
		1 1/4"	VST06-11/4A

Manufactured for
and on behalf of
Pittway Sàrl, Z.A., La Pièce 4,
1180 Rolle, Switzerland
by its authorised representative
Ademco 1 GmbH

For more information
homecomfort.resideo.com/europe
Ademco 1 GmbH, Hardhofweg 40,
74821 MOSBACH, GERMANY
Phone: +49 6261 810
Fax: +49 6261 81309

© 2020 Resideo Technologies, Inc. All rights reserved.

Subject to change. EN0H-1115GE23 R0420