ETHICON

PART OF THE Johnson & Johnson FAMILY OF COMPANIES

PRODUCT CATALOG

Access

Stapling

Ligation

Endo Devices

Gastric Band

Energy

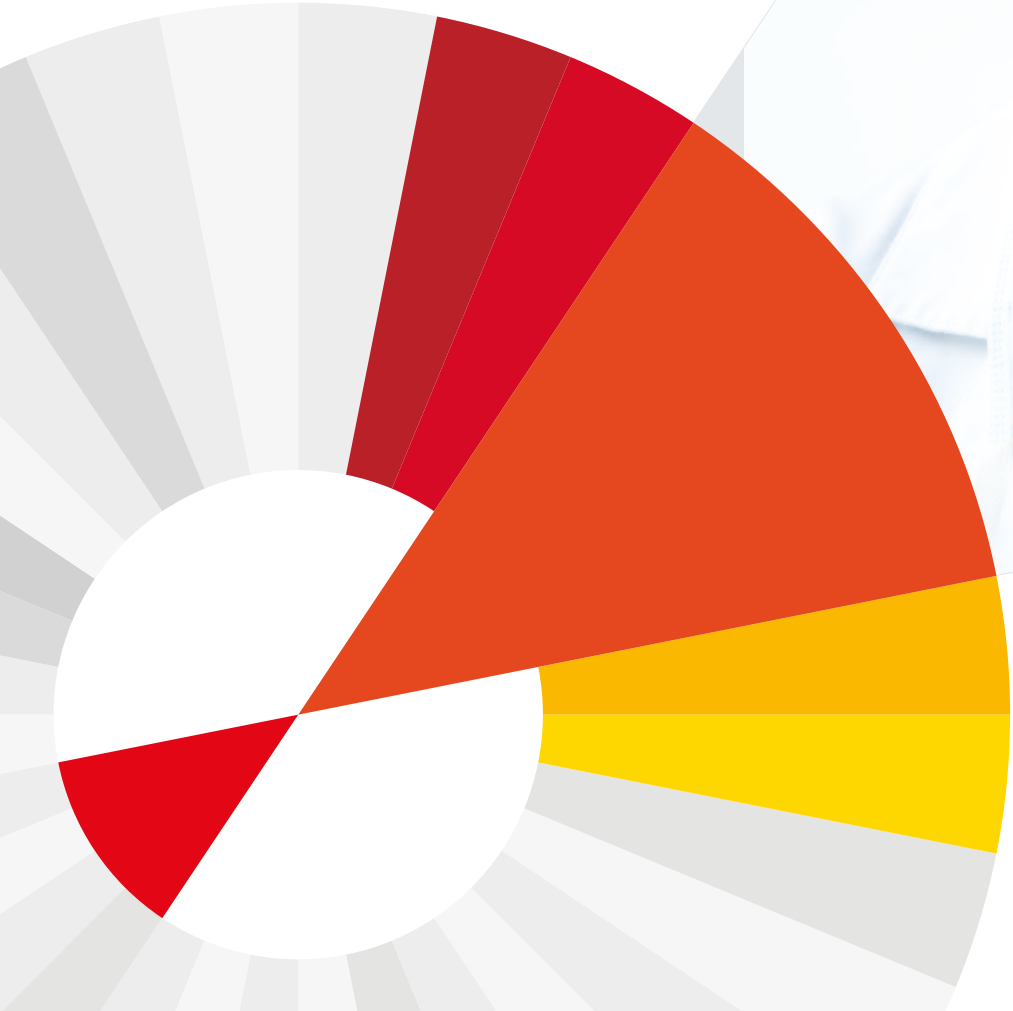

Johnson & Johnson

Our Credo

Since 1943

We believe our first responsibility is to the doctors, nurses
and patients, to mothers and fathers and all others
who use our products and services.
In meeting their needs
everything we do must be of high quality.
We must constantly strive to reduce our costs
in order to maintain reasonable prices.
Customers' orders must be serviced promptly and accurately.
Our suppliers and distributors must have an opportunity to make a fair profit.

We are responsible to our employees,
the men and women who work with us throughout the world.
Everyone must be considered as an individual.
We must respect their dignity and recognize their merit.
They must have a sense of security in their jobs.
Compensation must be fair and adequate,
and working conditions clean, orderly and safe.
We must be mindful of ways to help our employees
fulfill their family responsibilities.
Employees must feel free to make suggestions and complaints.
There must be equal opportunity for employment,
development and advancement for those qualified.
We must provide competent management,
and their actions must be just and ethical.

We are responsible to the communities
in which we live and work and to the world community as well.
We must be good citizens – support good works and charities
and bear our fair share of taxes.
We must encourage civic improvements and better health and education.
We must maintain in good order the property we are privileged to use,
protecting the environment and natural resources.

Our final responsibility is to our stockholders.
Business must make a sound profit.
We must experiment with new ideas.
Research must be carried on, innovative programs developed
and mistakes paid for.
New equipment must be purchased, new facilities provided
and new products launched.
Reserves must be created to provide for adverse times.
When we operate according to these principles,
the stockholders should realize a fair return.

ETHICON
PART OF THE Johnson & Johnson FAMILY OF COMPANIES

For ordering, please contact your local Customer Support

Sverige

Tel: 08-626 22 03
Fax: 08-626 22 30
E-post: cservse@its.jnj.com

Webshop:
http://www.emeaservice.com/eSales_sve

Finland

Puh: 0207-531 502
Faksi: 0207-531 509
s-posti: cservfi@its.jnj.com

Nettikauppa:
http://www.emeaservice.com/eSales_fin

Norge

Tel: 667 747 04
Fax: 669 817 77
E-post: cservno@its.jnj.com

Webshop:
http://www.emeaservice.com/eSales_nor

Danmark

Tel: 45 94 82 04
Fax: 45 94 82 12
E-post: cservdk@its.jnj.com

Webshop:
http://www.emeaservice.com/eSales_dan

Johnson & Johnson AB

www.ethicon.com
Staffans väg 2
S-191 84 Sollentuna
Sweden
Tel. 08-626 22 00

ETHICON

PART OF THE Johnson & Johnson FAMILY OF COMPANIES

ETHICON INNOVATIONS

Powered ECHELON FLEX™ ENDOPATH® Stapler

ENDOPATH® XCEL® Trocars with Optiview® Technology

ENSEAL®G2 Articulating

ETHICON Intraluminal Stapler (ILS)

Better surgery for a better world

LIGAMAX™ 5

ECHELON FLEX™ 45mm & 60mm
ENDOPATH® Staplers

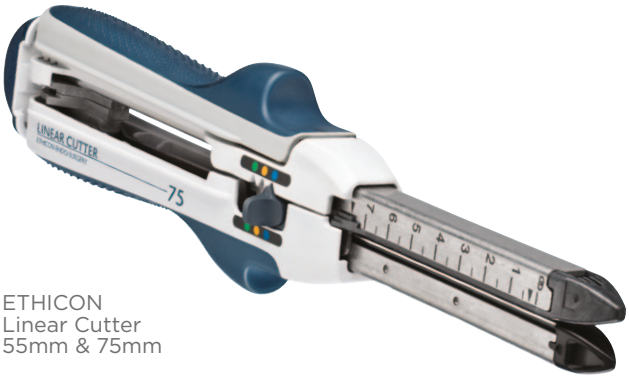

ETHICON
Linear Cutter
55mm & 75mm

TABLE OF CONTENTS

ORDERING	p. 03
ACCESS	p. 06
STAPLING	p. 18
LIGATION	p. 38
ENDO DEVICES	p. 46
GASTRIC BAND	p. 52
ENERGY	p. 58
INDEX	p. 76

ETHICON

PART OF THE Johnson & Johnson FAMILY OF COMPANIES

ACCESS

The benefits of ENDOPATH® XCEL® Trocars, now with smudge mitigation

Low insertion force: Ensures controlled and predictable entry.

- ENDOPATH® XCEL® Bladeless Trocars with OPTIVIEW® Technology have the lowest peak insertion force compared to leading Covidien, Applied Medical, and Taut® bladeless trocars[1]

Abdominal wall retention: Integrated thread design on bladeless, universal sleeve, and dilating tip cannulas helps minimize trocar slip-outs.

- Greater stability demonstrated in bladeless trocars:
  - —5mm ENDOPATH® XCEL® Bladeless Trocars with OPTIVIEW® Technology have twice as much peak retention force compared to leading 5mm Applied Medical trocars with threaded sleeves[2]
  - —12mm ENDOPATH® XCEL® Bladeless Trocars with OPTIVIEW® Technology have higher peak retention force than leading 12mm Applied Medical bladeless trocars[3]

Low drag force: Housing and seal are designed to reduce instrument hang-ups and provide low instrument insertion/extraction forces.

Direct visualization: Bladeless tip trocar allows for endoscopic optical entry.

ENDOPATH® XCEL® Trocars with OPTIVIEW® Technology are now available in 5mm and 12mm bladeless trocars, dilating tip trocars, and universal sleeves. Also available in 12mm blunt tip trocars.

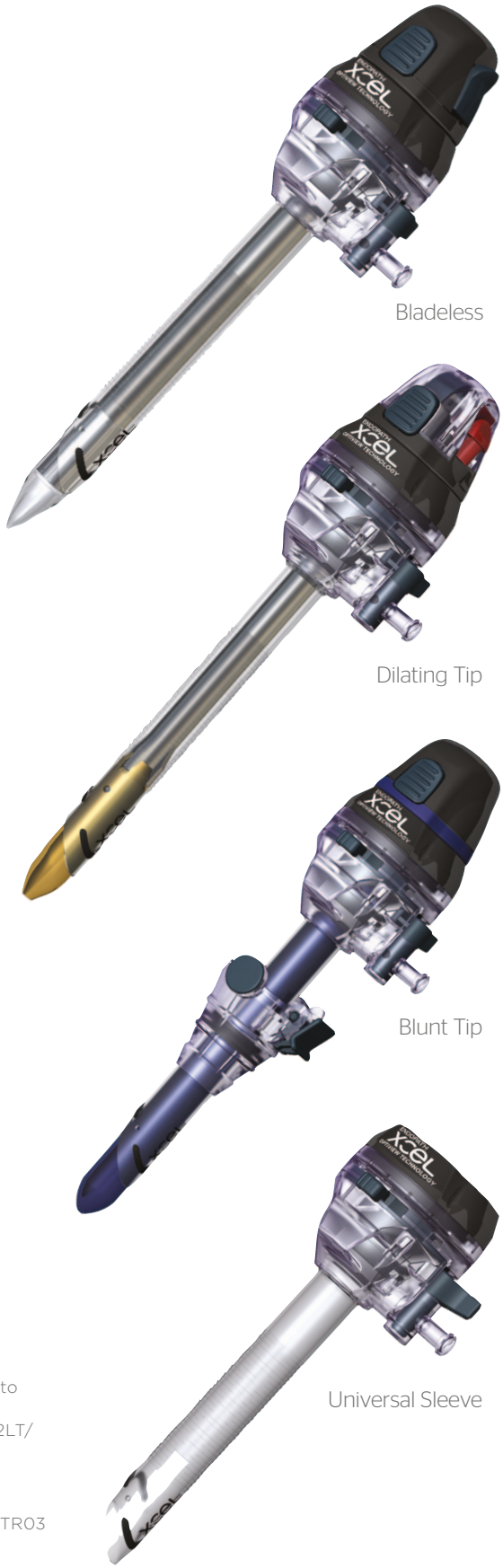

1. Comparing mean abdominal wall peak insertion forces of 2B5LT/B5LT (10.7lb) to CFR03/CFF03 (21.5lb), CTR03/CTF03 (12.5lb), COQ04/CFI13 (12.2lb), NB5STF (12.0lb) and 40510 (12.7lb), and mean abdominal wall peak insertion forces of 2B12LT/B12LT (19.2lb) to CTF73 (23.1lb), COR29/CFI83 (24.3lb), CFR73/CFF73 (31.7lb), NB12STF (29.6lb) and 41210 (26.0lb), in a preclinical model, P<0.05. Data on file. Study PRC049013. DSL 12-1101

2. Comparing mean abdominal wall retention forces of 2B5LT/B5LT (8.3lb), CTF03/CTR03 (4.1lb) and C0Q04/CF113 (4.1 lb), in a preclinical model, P<0.05. Data on file. Study PRC049013. DSL 12-1101

3. Comparing mean abdominal wall retention forces of 2B12LT/B12LT (16.1lb), CTF73 (8.8lb), CFR73/CFF73 (14.4lb), and C0R29/CF183 (11.9lb), in a preclinical model, P<0.05. Data on file. Study PRC049013. DSL 12-1101

Access

BLADELESS

5 mm ENDOPATH® XCEL™ Bladeless Trocars with Optiview® Technology

CODE	SLEEVE	SHAFT LENGTH	QUANTITY
2B5ST	Stability	75mm	6
2B5LT	Stability	100mm	6
2B5XT	Stability	150mm	6

5mm ENDOPATH® XCEL™ Bladeless Trocars

B5ST

B5LT

B5XT

CODE	SLEEVE	SHAFT LENGTH	QUANTITY
B5ST	Stability	75mm	6
B5LT	Stability	100mm	6
B5XT	Stability	150mm	6
B5SP	Smooth	75mm	6
B5LP	Smooth	100mm	6

5mm ENDOPATH® XCEL™ Bladeless Trocar with Handle

CODE	SLEEVE	SHAFT LENGTH	QUANTITY
B5LPH	Smooth	100mm	6

Access

8mm ENDOPATH® XCEL™ Bladeless Trocar

CODE	SLEEVE	SHAFT LENGTH	QUANTITY
B8LT	Stability	100mm	6

11mm ENDOPATH® XCEL™ Bladeless Trocars

B11LT

CODE	SLEEVE	SHAFT LENGTH	QUANTITY
B11LT	Stability	100mm	6
B11LP	Smooth	100mm	6

11mm ENDOPATH® XCEL™ Bladeless Trocars with Handle

B11LTH

CODE	SLEEVE	SHAFT LENGTH	QUANTITY
B11LTH	Stability	100mm	6
B11LPH	Smooth	100mm	6

12mm ENDOPATH® XCEL™ Bladeless Trocars

B12SRT

B12XT

B12LP

CODE	SLEEVE	SHAFT LENGTH	QUANTITY
B12SRT	Stability	75mm	6
B12LT	Stability	100mm	6
B12XT	Stability	150mm	6
B12LP	Smooth	100mm	6

Access

12 mm ENDOPATH® XCEL™ Bladeless Trocars with OPTIVIEW® Technology

CODE	SLEEVE	SHAFT LENGTH	QUANTITY
2B12LT	Stability	100mm	6
2B12XT	Stability	150mm	6

12mm ENDOPATH® XCEL™ Bladeless Trocars with Handle

B12LTH

B12LPH

CODE	SLEEVE	SHAFT LENGTH	QUANTITY
B12LTH	Stability	100mm	6
B12LPH	Smooth	100mm	6

15mm ENDOPATH® XCEL™ Bladeless Trocar

CODE	SLEEVE	SHAFT LENGTH	QUANTITY
B15LT	Stability	100mm	6

DILATING TIP

5 mm ENDOPATH® XCEL™ Dilation Tip Trocars with OPTIVIEW® Technology

CODE	SLEEVE	SHAFT LENGTH	QUANTITY
2D5ST	Stability	75mm	6
2D5LT	Stability	100mm	6

Access

DILATING TIP

5mm ENDOPATH® XCEL™ Dilating Tip Trocars

CODE	SLEEVE	SHAFT LENGTH	QUANTITY
D5ST	Stability	75mm	6
D5LT	Stability	100mm	6

11mm Endopath® XCEL™ Dilating Tip Trocar

CODE	SLEEVE	SHAFT LENGTH	QUANTITY
D11LT	Stability	100mm	6

12 mm ENDOPATH® XCEL™ Dilation Tip Trocars with OPTIVIEW® Technology

CODE	SLEEVE	SHAFT LENGTH	QUANTITY
2D12LT	Stability	100mm	6
2D12XT	Stability	150mm	6

12mm Endopath® XCEL™ Dilating Tip Trocars

CODE	SLEEVE	SHAFT LENGTH	QUANTITY
D12LT	Stability	100mm	6
D12XT	Stability	150mm	6

Access

SLEEVES

5 mm ENDOPATH® XCEL™ Universal Sleeve with OPTIVIEW® Technology

Can be used with Both XCEL™ Bladeless and Dilating Tip Trocar

CODE	SLEEVE	SHAFT LENGTH	QUANTITY
2CB5ST	Stability	75mm	6
2CB5LT	Stability	100mm	6

5mm ENDOPATH® XCEL™ Universal Sleeves

Can be used with Both XCEL™ Bladeless and Dilating Tip Trocar

CODE	SLEEVE	SHAFT LENGTH	QUANTITY
CB5LT	Stability	100mm	6
CB5ST	Stability	75mm	6

11mm ENDOPATH® XCEL™ Universal Sleeve

Can be used with Both XCEL™ Bladeless and Dilating Tip Trocar

CODE	SLEEVE	SHAFT LENGTH	QUANTITY
CB11LT	Stability	100mm	6

12 mm ENDOPATH® XCEL™ Universal Sleeve with OPTIVIEW® Technology

Can be used with Both XCEL™ Bladeless and Dilating Tip Trocar

CODE	SLEEVE	SHAFT LENGTH	QUANTITY
2CB12LT	Stability	100mm	6

Access

12mm ENDOPATH® XCEL™ Universal Sleeve

Can be used with Both XCEL™ Bladeless and Dilating Tip Trocar

CODE	SLEEVE	SHAFT LENGTH	QUANTITY
CB12LT	Stability	100mm	6

BLUNT TIP

12 mm ENDOPATH® XCEL™ Blunt Tip Trocar with OPTIVIEW® Technology

Can be used with Both XCEL™ Bladeless and Dilating Tip Trocar

CODE	SHAFT LENGTH	QUANTITY
2H12LP	100mm	6

12mm ENDOPATH® XCEL™ Blunt Tip Trocar

CODE	SHAFT LENGTH	QUANTITY
H12LP	100mm	6

NEEDLES

ENDOPATH® Insufflation Needles Pneumoperitoneum

CODE	SHAFT LENGTH	QUANTITY
PN120	120mm	12
PN150	150mm	12

Access

ENDOPATH® Insufflation Needle Ultra Veress

CODE	SHAFT LENGTH	QUANTITY
UV120	120mm	12

THORACIC TROCARS

10mm/12mm ENDOPATH® Rigid Thoracic Trocar

CODE	SLEEVE	SHAFT DIAMETER	SHAFT LENGTH	QUANTITY
TT012	Thoracic	10mm/12mm	10mm/12mm	6

FLEXIPATH® Flexible Thoracic Trocars

FP007

FP015

FP020

CODE	OBTURATOR AND SLEEVE	SHAFT DIAMETER	SHAFT LENGTH	QUANTITY
FP007	Flexible	7mm	—	6
FP015	Flexible	15mm	—	6
FP020	Flexible	20mm	—	6

FLEXIPATH® Flexible Thoracic Trocar Pack

CODE	DESCRIPTION	QUANTITY
FPK02	Contains: (1) 15mm Obturator and (3) 15mm Flexible Sleeves	6

Access

HAND-ASSISTED LAPAROSCOPY (HALS)

ENDOPATH® DEXTRUS™ HALS Retractors

FLR01

FLR02

FLR03

CODE	DESCRIPTION	ABDOMINAL WALL THICKNESS	QUANTITY
FLR01	Fixed Length Access Retractor—Small	< 4cm	6
FLR02	Fixed Length Access Retractor—Medium	4–7cm	6
FLR03	Fixed Length Access Retractor—Large	> 7cm	6

ENDOPATH® DEXTRUS™ HALS Products Retractor sold separately

CODE	DESCRIPTION	QUANTITY
HAP02	Seal Cap Assembly with Accessories	3

ETHICON

PART OF THE Johnson & Johnson FAMILY OF COMPANIES

STAPLING

Powered ECHELON FLEX™ ENDOPATH® Stapler

Compression with Stability.
Power with Control.

The Powered ECHELON FLEX™ ENDOPATH® Stapler is the only powered endocutter with enhanced system-wide tissue compression, minimising inadvertent movement at the tip of the stapler and delivering consistent staple formation.

Key surgical concerns

- Minimise the risk of damaging critical anatomical structures adjacent to the surgical site
- Prevent leakage or bleeding from the staple line

Main device benefits

- Virtually effortless, powered firing reduces inadvertent movement at the tip of the stapler, by at least 63 % during the transection of thick tissue[1], potentially resulting in less trauma
- Tissue compression before and jaw alignment during firing ensure consistent staple formation for haemostasis across the entire staple line[2]

[1] Bench top testing on porcine stomach (2,5 – 4,0 mm thick). Surgeons (n = 19) fired each instrument/reload once: PSE60A/ECR60G and EGIAUSTND/EGIA60AMT. Reduction of inadvertent movement was at least 63% with a median of 87% (99% reliability at 90% confidence).

[2] DSL-11-0653. Data on file, Ethicon Endo-Surgery, Inc.

Stapling

ENDOCUTTERS

Powered ECHELON FLEX™ 45mm Endocutters Reloads Sold Separately

CODE	ARTICULATION	SHAFT LENGTH	QUANTITY
PCE45A	Yes	280mm	3
PSE45A	Yes	340mm	3
PLE45A	Yes	440mm	3

Echelon Flex™ 45mm Endocutters Reloads Sold Separately

CODE	ARTICULATION	SHAFT LENGTH	QUANTITY
SC45A	Yes	280mm	3
EC45A	Yes	340mm	3
EC45AL	Yes	440mm	3

Echelon™ 45mm Endocutters Reloads Sold Separately

CODE	ARTICULATION	SHAFT LENGTH	QUANTITY
SC45	No	280mm	3
EC45	No	340mm	3

Echelon™ 45mm Reloads

For use with all Echelon™ 45mm Endoscopic Staplers
(SC45A, EC45A, EC45AL, SC45, EC45, PCE45A, PSE45A, PLE45A)

CODE	COLOR	ROWS	TISSUE TYPE	OPEN STAPLE HEIGHT	CLOSED STAPLE HEIGHT	QUANTITY
ECR45M	Gray	6	Mesentery	2.0mm	.75mm	12
ECR45W	White	6	Vascular	2.5mm	1.0mm	12
ECR45B	Blue	6	Standard	3.5mm	1.5mm	12
ECR45D	Gold	6	Standard/Thick	3.8mm	1.8mm	12
ECR45G	Green	6	Thick	4.1mm	2.0mm	12

Stapling

Powered ECHELON FLEX™ 60mm Endocutters Reloads Sold Separately

CODE	ARTICULATION	SHAFT LENGTH	QUANTITY
PCE60A	Yes	280mm	3
PSE60A	Yes	340mm	3
PLE60A	Yes	440mm	3

Echelon Flex™ 60mm Endocutters Reloads Sold Separately

CODE	ARTICULATION	SHAFT LENGTH	QUANTITY
SC60A	Yes	280mm	3
EC60A	Yes	340mm	3
LONG60A	Yes	440mm	3

Echelon™ 60mm Endocutters Reloads Sold Separately

CODE	ARTICULATION	SHAFT LENGTH	QUANTITY
SC60	No	280mm	3
EC60	No	340mm	3
LONG60	No	440mm	3

Echelon™ 60mm Reloads

For use with all Echelon™ 60mm Endoscopic Staplers
(SC60A, EC60A, LONG60A, SC60, EC60, LONG60, PCE60A, PSE60A, PLE60A)

CODE	COLOR	ROWS	TISSUE TYPE	OPEN STAPLE HEIGHT	CLOSED STAPLE HEIGHT	QUANTITY
ECR60M	Gray	6	Mesentery	2.0mm	0,75mm	12
ECR60W	White	6	Vascular	2.5mm	1.0mm	12
ECR60B	Blue	6	Standard	3.5mm	1.5mm	12
ECR60D	Gold	6	Standard/Thick	3.8mm	1.8mm	12
ECR60G	Green	6	Thick	4.1mm	2.0mm	12
ECR60T	Black	6	Extra Thick	4.4mm	2.3mm	12

Stapling

ETS Flex 45mm No-Knife Endocutters Reloads Sold Separately

CTS45NK

CODE	ARTICULATION	SHAFT LENGTH	QUANTITY
ATS45NK	Yes	340mm	3

ETS Flex 45mm Endocutters Reloads Sold Separately

CTS45

CODE	ARTICULATION	SHAFT LENGTH	QUANTITY
CTS45	Yes	240mm	3
ATS45	Yes	340mm	3
LONG45A	Yes	440mm	3

ETS 45mm Reloads

For use with all ETS 45mm Endoscopic Linear Cutters
(CTS45, ATS45, LONG45A, CTS45NK, ATS45NK, ETS45)

CODE	COLOR	ROWS	TISSUE TYPE	OPEN STAPLE HEIGHT	CLOSED STAPLE HEIGHT	QUANTITY
TR45W	White	6	Vascular	2.5mm	1.0mm	12
6R45B	Blue	6	Standard	3.5mm	1.5mm	12
TR45G	Green	4	Standard/Thick	4.1mm	2.0mm	12

Stapling

ETS Flex 35mm Endocutters ETS Flex 35mm Articulating Endoscopic Linear Cutters

CODE	ARTICULATION	SHAFT LENGTH	RELOAD INCLUDED	QUANTITY
ATW35	Yes	340mm	TR35W	3
ATB35	Yes	340mm	TR35B	3

ETS 35mm Straight Endocutters

CODE	ARTICULATION	SHAFT LENGTH	RELOAD INCLUDED	QUANTITY
TSW35	No	340mm	TR35W	3
TSB35	No	340mm	TR35B	3

ETS 35mm Reloads For use with all ETS 35mm Endoscopic Linear Cutters (ATW35, ATB35, TSW35, TSB35)

CODE	COLOR	ROWS	TISSUE TYPE	OPEN STAPLE HEIGHT	CLOSED STAPLE HEIGHT	QUANTITY
TR35W	White	6	Vascular	2.5mm	1mm	12
TR35B	Blue	6	Standard	3.5mm	1.5mm	12

Stapling

LINEAR CUTTERS

55mm Linear Cutters PROXIMATE® 55mm Linear Cutters with Safety Lockout

TVC55

TLC55

TCT55

CODE	COLOR	TISSUE TYPE	OPEN STAPLE HEIGHT	CLOSED STAPLE HE IGHT	RELOAD IN-CLUDED	QUANTITY
TVC55	White	Vascular	2.5mm	1.0mm	TVR55	3
TLC55	Blue	Standard	3.85mm	1.5mm	TCR55	3
TCT55	Green	Thick	4.5mm	2.0mm	TRT55	3

55mm Linear Cutter Reloads For use with all 55mm Linear Cutters (TVC55, TLC55, TCT55)

CODE	COLOR	ROWS	TISSUE TYPE	OPEN STAPLE HEIGHT	CLOSED STAPLE HEIGHT	QUANTITY
TVR55	White	4	Vascular	2.5mm	1.0mm	12
TCR55	Blue	4	Standard	3.85mm	1.5mm	12
TRT55	Green	4	Thick	4.50mm	2.0mm	12

Stapling

75mm Linear Cutters

PROXIMATE® 75mm Linear Cutters with Safety Lockout

TLC75

TCD75

TCT75

CODE	COLOR	TISSUE TYPE	RELOAD INCLUDED	OPEN STAPLE HEIGHT	CLOSED STAPLE HEIGHT	QUANTITY
TLC75	Blue	Standard	TCR75	3.85mm	1.5mm	3
TCD75	Gold	Standard/Thick	TRD75	4.2mm	1.8mm	3
TCT75	Green	Thick	TRT75	4.5mm	2.0mm	3

75mm Linear Cutter Reloads

For use with all 75mm Linear Cutters (TLC75, TCD75, TCT75)

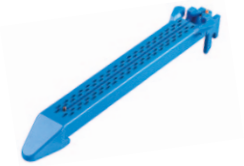

CODE	COLOR	ROWS	TISSUE TYPE	OPEN STAPLE HEIGHT	CLOSED STAPLE HEIGHT	QUANTITY
TCR75	Blue	4	Standard	3.85mm	1.5mm	12
TRD75	Gold	4	Standard/Thick	4.2mm	1.8mm	12
TRT75	Green	4	Thick	4.5mm	2.0mm	12

100mm Linear Cutters

PROXIMATE® 100mm Linear Cutters with Safety Lockout

TLC10

TCT10

CODE	COLOR	TISSUE TYPE	RELOAD INCLUDED	OPEN STAPLE HEIGHT	CLOSED STAPLE HEIGHT	QUANTITY
TLC10	Blue	Standard	TCR10	3.85mm	1.5mm	3
TCT10	Green	Thick	TRT10	4.5mm	2.0mm	3

100mm Linear Cutter Reloads

For use with all 100mm Linear Cutters (TLC10, TCT10)

CODE	COLOR	ROWS	TISSUE TYPE	OPEN STAPLE HEIGHT	CLOSED STAPLE HEIGHT	QUANTITY
TCR10	Blue	4	Standard	3.85mm	1.5mm	12
TRT10	Green	4	Thick	4.5mm	2.0mm	12

Stapling

ETHICON Linear Cutter 55, Selectable Staple Height

Reloads Sold Separately

CODE	SELECTABLE COLOR	TISSUE TYPE	QUANTITY
NTLC55	● ● ●	Selectable	3

ETHICON Linear Cutter 55, Selectable Staple Height – Reload

CODE	SELECTABLE COLOR	ROWS	TISSUE TYPE	OPEN STAPLE HEIGHT	CLOSED STAPLE HEIGHT	QUANTITY
SR55	●	6	Standard	4.3mm	1.5mm	12
	●	6	Standard/Thick	4.3mm	1.8mm	12
	●	6	Thick	4.3mm	2.0mm	12

ETHICON Linear Cutter 75, Selectable Staple Height

Reloads Sold Separately

CODE	SELECTABLE COLOR	TISSUE TYPE	QUANTITY
NTLC75	● ● ●	Selectable	3

ETHICON Linear Cutter 75, Selectable Staple Height – Reload

CODE	SELECTABLE COLOR	ROWS	TISSUE TYPE	OPEN STAPLE HEIGHT	CLOSED STAPLE HEIGHT	QUANTITY
SR75	●	6	Standard	4.3mm	1.5mm	12
	●	6	Standard/Thick	4.3mm	1.8mm	12
	●	6	Thick	4.3mm	2.0mm	12

Stapling

CIRCULAR STAPLERS

Endoscopic Curved Intraluminal Staplers

ECS21A

ECS25A

ECS29A

ECS33A

CODE	LUMEN	SHAFT LENGTH	HEAD DIAMETER	OPEN STAPLE HEIGHT	CLOSED STAPLE HEIGHT	QUANTITY
ECS21A	12.4mm	28cm	21mm	5.5mm	1.0–2.5mm Adjustable	3
ECS25A	16.4mm	28cm	25mm	5.5mm	1.0–2.5mm Adjustable	3
ECS29A	20.4mm	28cm	29mm	5.5mm	1.0–2.5mm Adjustable	3
ECS33A	24.4mm	28cm	33mm	5.5mm	1.0–2.5mm Adjustable	3

Curved Intraluminal Staplers

CDH21A

CDH25A

CDH29A

CDH33A

CODE	LUMEN	SHAFT LENGTH	HEAD DIAMETER	OPEN STAPLE HEIGHT	CLOSED STAPLE HEIGHT	QUANTITY
CDH21A	12.4mm	18cm	21mm	5.5mm	1.0–2.5mm Adjustable	3
CDH25A	16.4mm	18cm	25mm	5.5mm	1.0–2.5mm Adjustable	3
CDH29A	20.4mm	18cm	29mm	5.5mm	1.0–2.5mm Adjustable	3
CDH33A	24.4mm	18cm	33mm	5.5mm	1.0–2.5mm Adjustable	3

Straight Intraluminal Staplers

SDH21A

SDH25A

SDH29A

SDH33A

CODE	LUMEN	SHAFT LENGTH	HEAD DIAMETER	OPEN STAPLE HEIGHT	CLOSED STAPLE HEIGHT	QUANTITY
SDH21A	12.4mm	18cm	21mm	5.5mm	1.0–2.5mm Adjustable	3
SDH25A	16.4mm	18cm	25mm	5.5mm	1.0–2.5mm Adjustable	3
SDH29A	20.4mm	18cm	29mm	5.5mm	1.0–2.5mm Adjustable	3
SDH33A	24.4mm	18cm	33mm	5.5mm	1.0–2.5mm Adjustable	3

Stapling

ENDOPATH® ILS Circular Sizer Set

CODE	DESCRIPTION	QUANTITY
CSS	Bowel Sizers for the ENDOPATH® ILS Curved Staplers, the set includes one each of a 25mm, 29mm, and 33mm sizer	1

Reusable Purse String Clamp

CODE	DESCRIPTION	QUANTITY
EH40	—	1

PROCEDURE STAPLERS

PPH Procedure Set

CODE	DESCRIPTION	QUANTITY
PPH03	Includes Hemorrhoidal Circular Stapler 33mm, suture threader, circular anal dilator, and purse string anoscope	3

STARR Procedure Set

CODE	DESCRIPTION	QUANTITY
PPH01	For Stapled Transanal Rectal Resection (STARR)	3

Stapling

LINEAR STAPLERS

TX 30mm Linear Stapler PROXIMATE® TX 30mm Reloadable Linear Stapler

CODE	COLOR	TISSUE TYPE	RELOAD IwNCLUDED	OPEN STAPLE HEIGHT	CLOSED STAPLE HEIGHT	QUANTITY
TX30V	White	Vascular	XR30V	2.5mm	1.0mm	3
XR30V	White	Vascular	—	2.5mm	1.0mm	12

TX 30mm Linear Staplers PROXIMATE® TX 30mm Reloadable Linear Staplers

TX30B

TX30G

CODE	COLOR	TISSUE TYPE	RELOAD INCLUDED	OPEN STAPLE HEIGHT	CLOSED STAPLE HEIGHT	QUANTITY
TX30B	Blue	Standard	XR30B	3.5mm	1.5mm	3
TX30G	Green	Thick	XR30G	4.8mm	2.0mm	3

TX 30mm Linear Stapler Reloads For use with (TX30B, TX30G)

CODE	COLOR	TISSUE TYPE	OPEN STAPLE HEIGHT	CLOSED STAPLE HEIGHT	QUANTITY
XR30B	Blue	Standard	3.5mm	1.5mm	12
XR30G	Green	Thick	4.8mm	2.0mm	12

Stapling

TX 60mm Linear Staplers PROXIMATE® TX 60mm Reloadable Linear Staplers

TX60B

TX60G

CODE	COLOR	TISSUE TYPE	RELOAD INCLUDED	OPEN STAPLE HEIGHT	CLOSED STAPLE HEIGHT	QUANTITY
TX60B	Blue	Standard	XR60B	3.5mm	1.5mm	3
TX60G	Green	Thick	XR60G	4.8mm	2.0mm	3

TX 60mm Linear Stapler Reloads For use with (TX60B, TX60G)

CODE	COLOR	TISSUE TYPE	OPEN STAPLE HEIGHT	CLOSED STAPLE HEIGHT	QUANTITY
XR60B	Blue	Standard	3.5mm	1.5mm	12
XR60G	Green	Thick	4.8mm	2.0mm	12

Stapling

TL 30mm Linear Stapler

TL Reloadable Linear Stapler with Adjustable Staple Height and Reload. For use with (TL30)

CODE	DESCRIPTION	RELOAD INCLUDED	STAPLE HEIGHT	QUANTITY
TL30	30mm TL Reloadable Linear Stapler	TR30	1.0–2.5mm	3
TR30	—	—	1.0–2.5mm	12

TL 60mm Linear Stapler

TL Reloadable Linear Stapler with Adjustable Staple Height and Reload. For use with (TL60)

CODE	DESCRIPTION	RELOAD INCLUDED	STAPLE HEIGHT	QUANTITY
TL60	60mm TL Reloadable Linear Stapler	TR60	1.0–2.5mm	3
TR60	—	—	1.0–2.5mm	12

TL 90mm Linear Stapler

TL Reloadable Linear Stapler, Heavy Wire with Adjustable Staple Height and Reload. For use with (TL90)

CODE	DESCRIPTION	RELOAD INCLUDED	STAPLE HEIGHT	QUANTITY
TL90	90mm TL Reloadable Linear Stapler	TR90	1.0–2.5mm	3
TR90	—	—	1.0–2.5mm	12

Stapling

TLV 30mm Linear Stapler

TLV Reloadable Linear Stapler, Heavy Wire with Adjustable Staple Height for use with TLV30

CODE	DESCRIPTION	RELOAD INCLUDED	STAPLE HEIGHT	QUANTITY
TLV30	30mm TLV Reloadable Linear Stapler	TRV30	1.0mm	3
TRV30	For use with TLV30	—	1.0mm	12

TLH 30mm Linear Stapler

TLH Reloadable Linear Stapler, Heavy Wire with Adjustable Staple Height

CODE	DESCRIPTION	RELOAD INCLUDED	STAPLE HEIGHT	QUANTITY
TLH30	30mm TLH Reloadable Linear Stapler	TRH30	1.0–2.5mm	3
TRH30	For use with TLH30	—	1.0–2.5mm	12

TLH 60mm Linear Stapler

TLH Reloadable Linear Stapler, Heavy Wire with Adjustable Staple Height

CODE	DESCRIPTION	RELOAD INCLUDED	STAPLE HEIGHT	QUANTITY
TLH60	60mm TLH Reloadable Linear Stapler	TRH60	1.5–2.5mm	3
TRH60	For use with TLH60	—	1.5–2.5mm	12

TLH 90mm Linear Stapler

TLH Reloadable Linear Stapler, Heavy Wire with Adjustable Staple Height

CODE	DESCRIPTION	RELOAD INCLUDED	STAPLE HEIGHT	QUANTITY
TLH90	90mm TLH Reloadable Linear Stapler	TRH90	1.5–2.5mm	3
TRH90	For use with TLH90	—	1.5–2.5mm	12

Stapling

SKIN STAPLERS

Rotating Head Skin Staplers PROXIMATE® Rotating Head Skin Staplers with Stainless Steel Staples

CODE	SIZE	STAPLES	QUANTITY
PRR35	Regular	35	6
PRW35	Wide	35	6

Fixed Head Skin Staplers PROXIMATE® Plus MD Fixed Head Skin Staplers with Multi-Directional Release

CODE	SIZE	STAPLES	QUANTITY
PMR35	Regular	35	6
PMW35	Wide	35	6

Fixed Head Skin Staplers

PROXIMATE® Plus MD Fixed Head Skin Staplers with Multi-Directional Release, Pistol Grip

CODE	SIZE	STAPLES	QUANTITY
PXW35	Wide	35	6
PXR35	Regular	35	6

Staple Extractor

CODE	SIZE	QUANTITY
PSX	Squeeze Handle Staple Extractor	12

Stapling

CURVED CUTTER STAPLERS

Contour® 40mm Linear Staplers

CS40B

CS40G

CODE	COLOR	RELOAD INCLUDED	OPEN STAPLE HEIGHT	CLOSED STAPLE HEIGHT	QUANTITY
CS40B	Blue	CR40B	3.5mm	1.44mm	3
CS40G	Green	CR40G	4.7mm	2.0mm	3

Contour® 40mm Linear Stapler Reloads For use with (CS40B, CS40G)

CODE	COLOR	OPEN STAPLE HEIGHT	CLOSED STAPLE HEIGHT	QUANTITY
CR40B	Blue	3.5mm	1.44mm	6
CR40G	Green	4.7mm	2.0mm	6

ETHICON

PART OF THE Johnson & Johnson FAMILY OF COMPANIES

The Ethicon Linear Cutter

Optimal compression, superior haemostasis

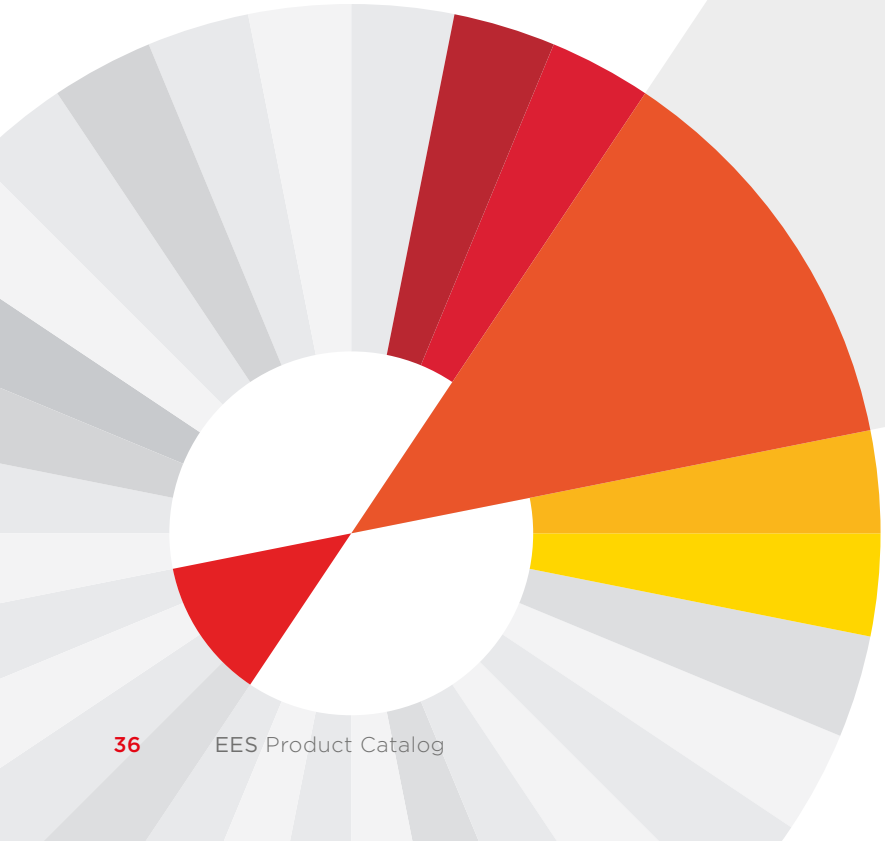

Stapling

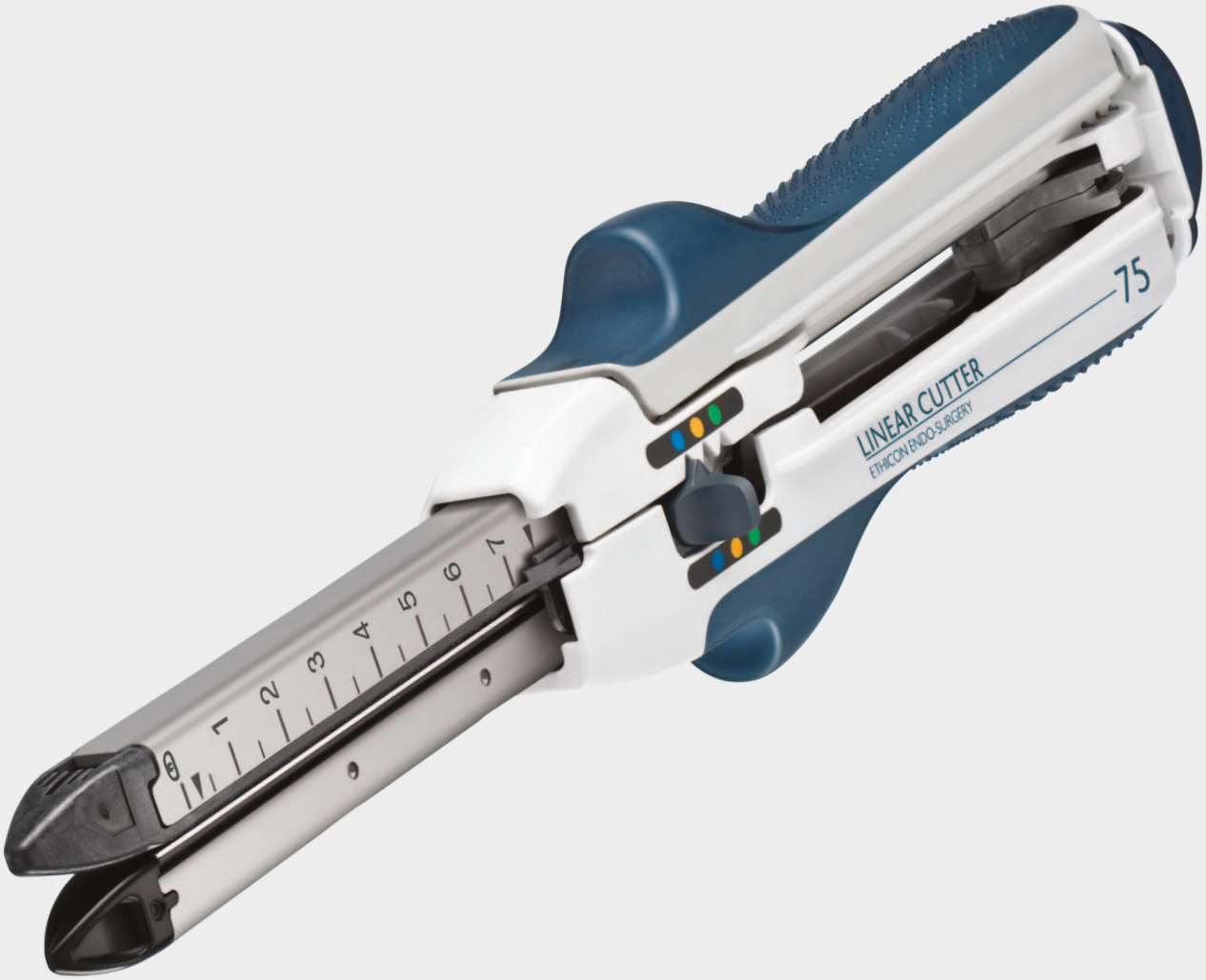

The Linear Cutter is the only open linear cutter with an 6-row, 3D surgical staple technology. Designed to deliver superior hemostasis and optimal compression*

Key surgical concerns

- Haemostasis/Airostasis
- Reliability
- Versatility

Main device benefits

- 6-Rows of staples, 3-D surgical staple designed to increase the area of tissue compression and superior haemostasis
- Unique Proximal Preload Mechanism enables consistent staple formation and safety lockout feature prevents firing of unloaded device
- selectable staple height in a single cartridge for a variety of tissue thickness you encounter
- Two sided firing allows for firing at any angle, whether left or right handed

*Preclinical animate study comparing the EES Linear Cutter 75 (NTLC75), the Ethicon Endo-Surgery TLC 75, and the DST Series™ GIA™ 80. Data on file; DSL 10-0412

ETHICON

PART OF THE Johnson & Johnson FAMILY OF COMPANIES

LIGATION

Ligation

ENDOSCOPIC MULTIPLE CLIP APPLIERS

Ligamax™ 5 Rotating Multiple Clip Applier

CODE	DIAMETER	CLIP SIZE	# OF CLIPS	QUANTITY
EL5ML	5mm	Medium/Large	15	3

LIGACLIP® Rotating Multiple Clip Applier

CODE	DIAMETER	CLIP SIZE	# OF CLIPS	QUANTITY
ER320	10mm	Medium/Large	20	3

LIGACLIP® Rotating Multiple Clip Applier

CODE	DIAMETER	CLIP SIZE	# OF CLIPS	QUANTITY
ER420	12mm	Large	20	3

ENDOPATH® MULTIFEED STAPLER

Endoscopic MultiFeed Stapler

CODE	DIAMETER	SHAFT LENGTH	OPEN STA PLE HEIGHT	CLOSED STAPLE HEIGHT	# OF CLIPS	QUANTITY
EMS	11mm	37,5 cm	3,7 mm	2,59 mm	20	6

Ligation

OPEN MULTIPLE CLIP APPLIERS

LIGACLIP® Multiple Clip Appliers

MCS20

MSM20

MCM20

MCM30

MCL20

CODE	LENGTH	CLIP SIZE	# OF CLIPS	QUANTITY
MCS20	23.8cm	Small	20	6
MSM20	23.8cm	Medium	20	6
MCM20	29.2cm	Medium	20	6
MCM30	29.2cm	Medium	30	6
MCL20	33.7cm	Large	20	6

ENDOSCOPIC SINGLE CLIP APPLIERS

LIGACLIP® Multi-Patient Use Single Clip Appliers

(Uses LIGACLIP® EXTRA Stainless Steel or Titanium Ligating Clips)

CODE	CLIP SIZE	QUANTITY
LC2010Z	Medium	1
LC3010Z	Medium/Large	1
LC4010Z	Large	1

OPEN SINGLE CLIP APPLIERS

LIGACLIP® Multi-Patient Use Single Clip Appliers—Blue

LX105

LX107

LX110

LX130

CODE	DESCRIPTION	HANDLE COLOR	LENGTH	CLIP SIZE	QUANTITY
LX105	—	Blue	14.6cm	Small	1
LX107	—	Blue	19.1cm	Small	1
LX110	—	Blue	26.7cm	Small	1
LX130	Right Angle	Blue	26.7cm	Small	1

Ligation

LIGACLIP® Multi-Patient Use Single Clip Appliers—Silver

LX205

LX207

LX210

LX220

LX230

CODE	DESCRIPTION	HANDLE COLOR	LENGTH	CLIP SIZE	QUANTITY
LX205	—	Silver	14.6cm	Medium	1
LX207	—	Silver	19.1cm	Medium	1
LX210	—	Silver	26.7cm	Medium	1
LX220	Angled Jaw	Silver	26.7cm	Medium	1
LX230	Right Angle	Silver	26.7cm	Medium	1

LIGACLIP® Multi-Patient Use Single Clip Appliers—Green

LC307

LC310

LC320

LC330

CODE	DESCRIPTION	HANDLE COLOR	LENGTH	CLIP SIZE	QUANTITY
LC307	—	Green	19.1cm	Medium/Large	1
LC310	—	Green	26.7cm	Medium/Large	1
LC320	Angled Jaw	Green	26.7cm	Medium/Large	1
LC330	Right Angle	Green	26.7cm	Medium/Large	1

LIGACLIP® Multi-Patient Use Single Clip Appliers—Yellow

LC407

LC410

LC420

LC430

CODE	DESCRIPTION	HANDLE COLOR	LENGTH	CLIP SIZE	QUANTITY
LC407	—	Yellow	19.1cm	Large	1
LC410	—	Yellow	26.7cm	Large	1
LC420	Angled Jaw	Yellow	26.7cm	Large	1
LC430	Right Angle	Yellow	26.7cm	Large	1

Ligation

LIGACLIP® Ligating Clip Cartridge Base

CODE	DESCRIPTION	QUANTITY
LC800	LIGACLIP® Ligating Clip Cartridge Base	1

LIGATION

SINGLE CLIPS

LIGACLIP® EXTRA Titanium Ligating Clips

For use with both Endoscopic and Open/Conventional Single Clip Reusable Appliers

CODE	COLOR	CLIP SIZE	# OF CLIPS	QUANTITY
LT100	Blue	Small	6	36
LT102	Blue	Small	20	15
LT200	Silver	Medium	6	36
LT202	Silver	Medium	20	15
LT300	Green	Medium/Large	6	18
LT400	Yellow	Large	6	18

Ligation

ABSOLOK absorbable clips

ABSOLOK® Endoscopic Reusable Single Ligating Clip Applier

CODE	DIAMETER	CLIP SIZE	COLOR CODE	QUANTITY
AP2010S	10 mm	Medium	Silver	1
AP3010S	10 mm	Medium/Large	Green	1
AP4010S	10 mm	Large	Yellow	1

ABSOLOK ® Open Reusable Single Ligating Clip Applier

CODE	LENGTH	CLIP SIZE	COLOR CODE	QUANTITY
AC105	14,5 cm	Small	Blue	1
AC107	18,5 cm	Small	Blue	1
AC207	18,5 cm	Medium	Silver	1
AC210	27,5 cm	Medium	Silver	1
AC307	18,5 cm	Medium/Large	Green	1
AC310	27,5 cm	Medium/Large	Green	1
AC410	27,5 cm	Large	Yellow	1

Ligation

ABSOLOK ® Absorbable Single Clips

CODE	CLIP SIZE	COLOR CODE	# OF CLIPS	Quantity
AP200	Medium	Silver	10	6
AP201	Medium	Silver	5	6
AP300	Medium/Large	Green	10	6
AP301	Medium/Large	Green	5	6
AP306	Medium/Large	Green	6	6
AP400	Large	Yellow	10	6
AP401	Large	Yellow	5	6

ETHICON

PART OF THE Johnson & Johnson FAMILY OF COMPANIES

ENDO DEVICES

Endo Devices

POUCH

ENDOPATH® Specimen Retrieval Bags

CODE	DESCRIPTION	QUANTITY
POUCH	4”x6” ENDOPOUCH® Specimen Retrieval Bag, 224ml	6

Endo Devices

ENDO INSTRUMENTS

ENDOPATH® 5mm Instruments

5BB

5DCD

5DCS

5DSG

CODE	DESCRIPTION	QUANTITY
5BB	Babcock, 5mm	6
5DCD	Dissector, Curved, with Monopolar Cautery, 5mm	6
5DCS	Scissors, Curved, with Monopolar Cautery, 5mm	6
5DSG	Grasper, 5mm	6

ENDOPATH® 5mm Instruments—Blunt Tip

CODE	DESCRIPTION	QUANTITY
BTD05	Dissector, Blunt Tip, 5mm, 3 per Pouch, 12 Pouches per Unit	12

ENDOPATH® 10mm Instruments

10AG

10BB

CODE	DESCRIPTION	QUANTITY
10AG	Anvil Grasper, 10mm	6
10BB	Babcock, 10mm	6

Endo Devices

ENDOPATH® 10mm Instruments—Blunt Tip

CODE	DESCRIPTION	QUANTITY
BCD10	Dissector, Blunt Cherry, 10mm, 3 per Pouch, 12 Pouches per Unit	12

ENDOSUTURE

LAPRA-TY® Absorbable Suture Products

CODE	DESCRIPTION	QUANTITY
MIC4030	LAPRA-TY® Absorbable Suture Clip Applier, Reusable, for use with 11mm or 12mm Diameter Trocar	1

LAPRA-TY® Absorbable Suture Products

MIC4036

CODE	DESCRIPTION	QUANTITY
MIC4032	LAPRA-TY® Absorbable Suture Clips for use with 2-0, 3-0, 4-0 Coated VICRYL Suture, 2 Clips per Cartridge	6
MIC4034	LAPRA-TY® Absorbable Suture Clips for use with 2-0, 3-0, 4-0 Coated VICRYL Suture, 4 Clips per Cartridge	6
MIC4036	LAPRA-TY® Absorbable Suture Clips for use with 2-0, 3-0, 4-0 Coated VICRYL Suture, 6 Clips per Cartridge	6

Suture Assistant

CODE	DESCRIPTION	QUANTITY
SW100	Endoscopic Suturing Device	4

Endo Devices

Suture Assistant

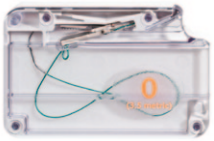
SW110

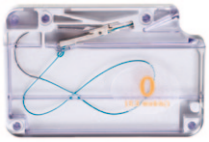
SW120

SW122

CODE	DESCRIPTION	QUANTITY
SW110	Suture Reload Unit with 15,24 cm ETHIBOND EXCEL (size 0) and EEN (CANOE) Needle	10
SW120	Suture Reload Unit with 15,24 cm ETHIBOND EXCEL (size 0) and SH Needle	10
SW122	Suture Reload Unit with 15,24 cm ETHIBOND EXCEL (size 2-0) and SH Needle	10

ENDOLOOP® Ligature

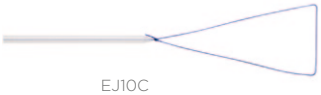
EJ10C

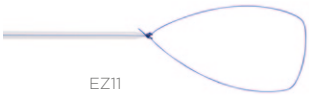
EZ11

CODE	DESCRIPTION	QUANTITY
EJ10C	ENDOLOOP® Coated VICRYL Ligature, 50 cm	12
EJ11	ENDOLOOP®, VICRYL Loop Ligature, 0, 50cm	12
EZ11	ENDOLOOP®, PDS Loop Ligature, 0, 50 cm	12
MIC108G	ENDOLOOP®, PDS II Loop Ligature, 3-0	12
MIC109G	ENDOLOOP®, PDS II Loop Ligature, 2-0	12
MIC110G	ENDOLOOP®, PDS II Loop Ligature, 0	12
MIC113G	ENDOLOOP®, PDS II L oop Ligature, Lwarge, 1	12
MIC52E	PDS II VIO 7cm M2	24
MIC54E	PDS II VIO 7cm M2	24
MIC55E	PDS II VIO 10cm M2	24

LAPAROSCOPIC NEEDLE HOLDER

CODE	DESCRIPTION	QUANTITY
E705R	ENDOPATH® Needle Holder, Reusable, 5mm, 30cm Length	1
E705RL	ENDOPATH® Needle Holder, Reusable, 5mm, 45cm Length	1
SRNH1	Self Righting Needle Holder, Reusable, 5mm, 30cm Length	1
SRNH1L	Self Righting Needle Holder, Reusable, 5mm, 45cm Length	1

ETHICON

PART OF THE Johnson & Johnson FAMILY OF COMPANIES

GASTRIC BANDING

Gastric Band

ADJUSTABLE GASTRIC BAND-C

Adjustable Gastric Band-C

CODE	DESCRIPTION	QUANTITY
BD3XV	Includes Band-C, Injection Port and Applier	1

Adjustable Gastric Band-C Pak with Endoscopic Dissector

CODE	DESCRIPTION	QUANTITY
LGB12	Contains one each of BD3XV, GOLD1, B15LT	1

Gastric Band

ANCILLARY DEVICES FOR GASTRIC BANDING

Injection Port and Applier

CODE	DESCRIPTION	QUANTITY
PT2XV	Replacement Port and Applier Only	1

Goldfinger™ Endoscopic Dissector

CODE	DESCRIPTION	QUANTITY
GOLD1	Goldfinger™ Endoscopic Dissector and Gastric Band retrieval system	1

Gastric Calibration Tube, Asymmetrical

CODE	DESCRIPTION	QUANTITY
GCT-180	Gastric Calibration Tube – 180° Asymmetrical ballon	1

Gastric Calibration Tube, Symmetrical

CODE	DESCRIPTION	QUANTITY
GCT-360	Gastric Calibration Tube – 360° Symmetrical ballon	1

Gastric Band

50mm Huber Needle

CODE	DESCRIPTION	QUANTITY
79995	Huber Needles, 50mm, 22G	25

90mm Huber Needle

CODE	DESCRIPTION	QUANTITY
79994	Huber Needles, 90mm, 22G	25

Curved Adjustable Gastric Band

The Curved Adjustable Gastric Band with Gastric Band Sutureless Port and Applier (previously: SAGB VC Gastric Band with Velocity Injection Port and Applier) is designed to meet your practice needs and deliver a consistent band experience.

Integrated locking connector and strain relief

Protection against tubing punctures and tube kinking.

Greatest tubing protection

30.4mm protection zone provides 27 percent to 95 percent greater protection than competitive ports.[1]

Minimises inadvertent tubing punctures near the port connection.

One-size-fits-all design

Accommodates a wide range of patient sizes, eliminating band choice.

Allows you to follow a single, preferred fill protocol, simplifying adjustment follow-up.

High-volume balloon enables manageable fill volumes.

High volume, low pressure

Designed to reduce potential for tissue trauma.

1. Measurement done from center of septum to end of the locking connector.

ETHICON

PART OF THE Johnson & Johnson FAMILY OF COMPANIES

ENERGY

ETHICON

PART OF THE Johnson & Johnson FAMILY OF COMPANIES

ENSEAL® G2 Articulating Seals like no other

Unparalleled approach to superior sealing

- Facilitates a perpendicular approach to vessels through **110° of articulation** with **full 360° shaft rotation**
- Vessels sealed with a **perpendicular approach** are more than **28% stronger** than vessels sealed at a 45° angle[1]
- Helps capture vessels in one bite

Unmatched maneuvering for better access

- Provides the ability to maneuver around corners and behind structures
- Provides access to tissue in deep or tight spaces for greater control of the angle of approach to vessels[2]
- May reduce the amount of tissue manipulation needed to access a targeted area[2]

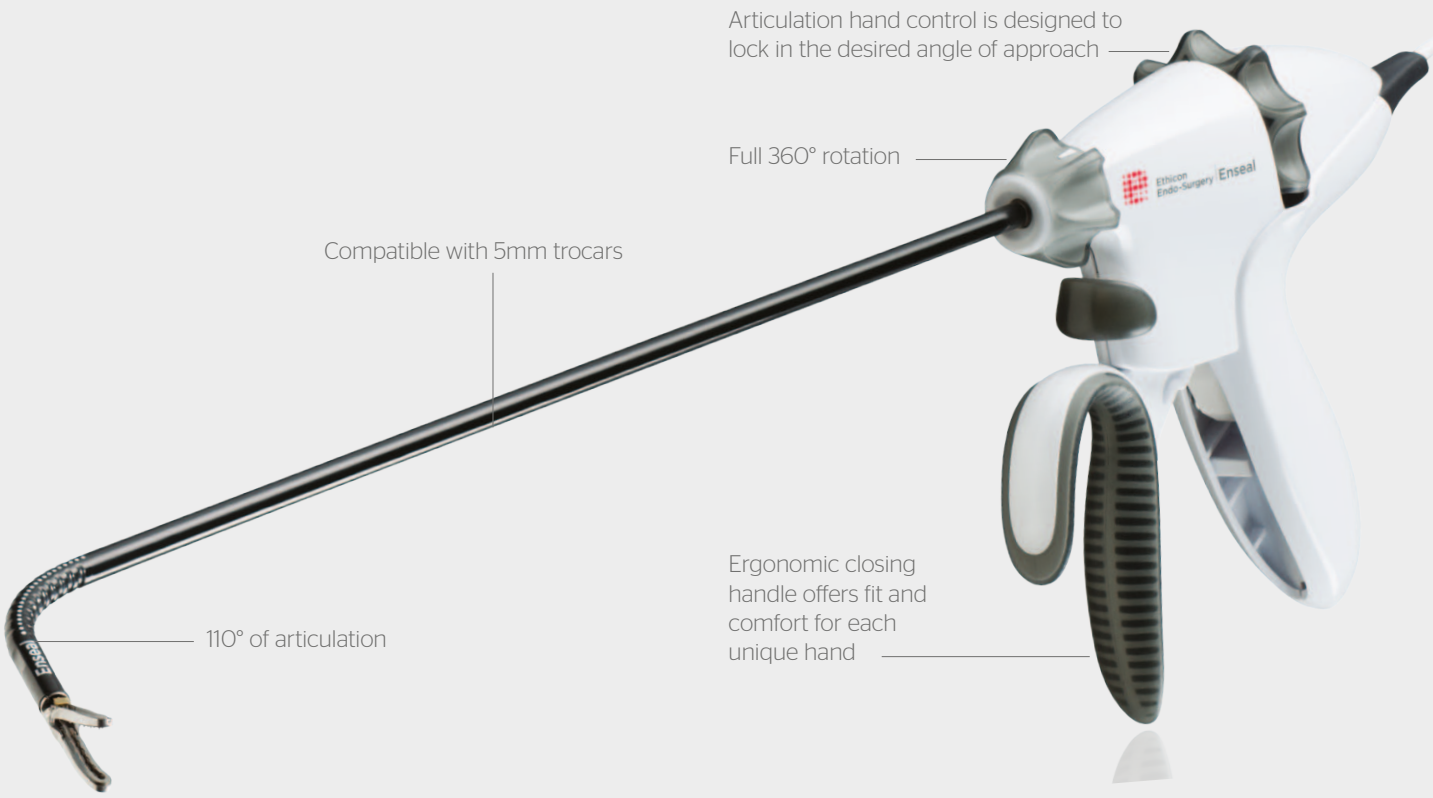

ENERGY

Unsurpassed tissue-sealing technology

SECURE

- Seals and cuts vessels up to 7mm diameter as well as lymphatics[3]
- I-BLADE® delivers high uniform compression to ensure a strong seal

GENTLE

- Temperature regulating PTC material is designed to minimize sticking
- Offset electrode configuration is designed to minimize thermal spread

1. ENSEAL® devices tested in a benchtop study on 5-7mm porcine carotid arteries. With NSLG2C35A devices, median burst pressures were 51% higher for vessels sealed at a 90° angle compared to vessels sealed at a 45° angle (P=0.0007). With NSLG2S35A devices, mean burst pressures were 29% higher for vessels sealed at a 90° angle compared to vessels sealed at a 45° angle (P=0.001).
2. Compared to a non-articulating device.
3. Ethicon Endo-Surgery internal study PSP003113. Studies conducted on porcine mesentery.

ENSEAL® G2 Tissue Sealers

All ENSEAL® and HARMONIC® devices are compatible with the Ethicon Endo-Surgery Generator G11 (code: GEN 11).

ENSEAL® G2 Articulating Curved

CODE	SHAFT DIAMETER	SHAFT LENGHT	QUANTITY
NSLG2C35A	5mm	35cm	6

ENSEAL® G2 Articulating Straight

CODE	SHAFT DIAMETER	SHAFT LENGHT	QUANTITY
NSLG2S35A	5mm	35cm	6

ENSEAL® G2 Curved

CODE	SHAFT DIAMETER	SHAFT LENGHT	QUANTITY
NSLG2C14	5mm	14cm	6
NSLG2C25	5mm	25cm	6
NSLG2C35	5mm	35cm	6
NSLG2C45	5mm	45cm	6

ENSEAL® G2 Straight

CODE	SHAFT DIAMETER	SHAFT LENGHT	QUANTITY
NSLG2S14	5mm	14cm	6
NSLG2S25	5mm	25cm	6
NSLG2S35	5mm	35cm	6
NSLG2S45	5mm	45cm	6

ENSEAL® G2 Super Jaw

CODE	SHAFT DIAMETER	SHAFT LENGHT	QUANTITY
NSEALX22L	12mm	22cm	6

ENSEAL® TRIO

CODE	TIP	SHAFT DIAMETER	SHAFT LENGTH	QUANTITY
ETRIO325H	3mm Curved	5mm	25cm	6
ETRIO335H	3mm Curved	5mm	35cm	6
ETRIO345H	3mm Curved	5mm	45cm	6

ENSEAL® Round Tip

CODE	TIP	SHAFT DIAMETER	SHAFT LENGTH	QUANTITY
NSEAL525RH	5mm Round	5mm	25cm	6
NSEAL535RH	5mm Round	5mm	35cm	6
NSEAL545RH	5mm Round	5mm	45cm	6

HARMONIC ACE® +7 Shears: the most intelligent and innovative HARMONIC® device ever created

Uniting unmatched precision with powerful sealing ability, HARMONIC ACE + 7 Shears are designed for a wider range of surgical jobs to reduce the number of surgical devices needed to achieve hemostasis.

Next generation Adaptive Tissue Technology

- Ethicon generator modulates energy, controlling the thermal profile to reduce the risk of thermal damage
- The system senses and responds appropriately to changes in patient tissue conditions
- Audible feedback provides a cue to reduce activation time during transection, driving improved efficiency

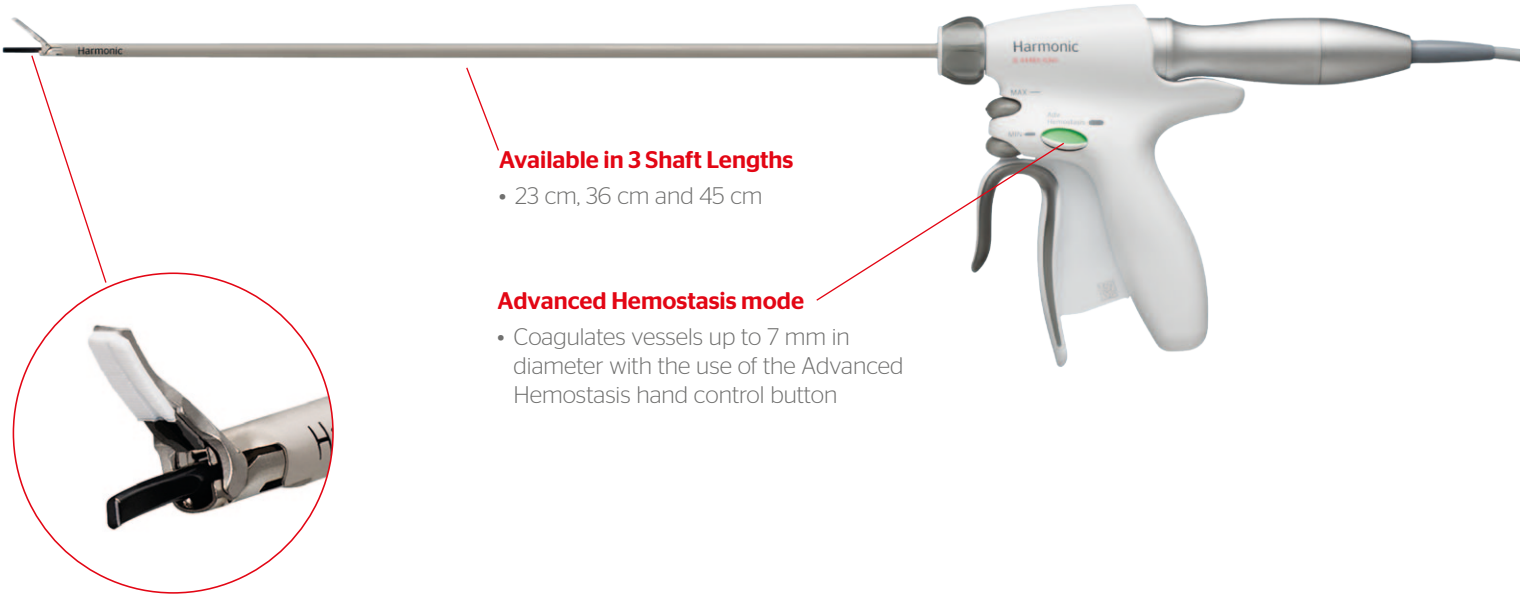

Available in 3 Shaft Lengths

- 23 cm, 36 cm and 45 cm

Advanced Hemostasis mode

- Coagulates vessels up to 7 mm in diameter with the use of the Advanced Hemostasis hand control button

Refined Blade Design

- Tapered tip designed for precision and multifunctionality
- Features a proprietary, nonstick coating

ETHICON Energy HARMONIC®

All ENSEAL® and HARMONIC® devices are compatible with the Ethicon Endo-Surgery Generator G11 (code: GEN 11).

SHEARS

HARMONIC ACE® +7 Shears with Adaptive Tissue Technology

CODE	TIP	SHAFT DIAMETER	SHAFT LENGTH	HAND PIECE	QUANTITY
HARH23	Curved Shears	5mm	23cm	HP054	6
HARH36	Curved Shears	5mm	36cm	HP054	6
HARH45	Curved Shears	5mm	45cm	HP054	6

HARMONIC ACE® + Shears with Adaptive Tissue Technology

HAR23

HAR36

CODE	TIP	SHAFT DIAMETER	SHAFT LENGTH	HAND PIECE	QUANTITY
HAR23	Curved Shears	5mm	23cm	HP054	6
HAR36	Curved Shears	5mm	36cm	HP054	6

HARMONIC ACE®

ACE 23E

ACE 36E

CODE	TIP	SHAFT DIAMETER	SHAFT LENGTH	HAND PIECE	QUANTITY
ACE23E	Curved Shears	5mm	23cm	HP054	6
ACE36E	Curved Shears	5mm	36cm	HP054	6
ACE45E	Curved Shears	5mm	45cm	HP054	6

HARMONIC ACE®

CODE	TIP	SHAFT DIAMETER	SHAFT LENGTH	HAND PIECE	QUANTITY
ACE14S	Curved Shears	5mm	14cm	HP054	6

ENERGY

ETHICON Energy HARMONIC®

All ENSEAL® and HARMONIC® devices are compatible with the Ethicon Endo-Surgery Generator G11 (code: GEN 11).

HARMONIC FOCUS® + with Adaptive Tissue Technology

CODE	TIP	SHAFT LENGTH	HAND PIECE	QUANTITY
HAR9F	Curved Shears	9cm	HPBLUE	6

HARMONIC FOCUS®

FCS9

FCS17

CODE	TIP	SHAFT LENGTH	HAND PIECE	QUANTITY
FCS9	Curved Shears	9cm	HPBLUE	6
FCS17	Curved Shears	17cm	HPBLUE	6

HARMONIC WAVE®

CODE	TIP	SHAFT DIAMETER	SHAFT LENGTH	HAND PIECE	QUANTITY
WAVE18S	Straight Shears	8.5mm	18cm	HP054	6

HARMONIC® Coagulating Shears

LCSC5

CS23C

CODE	TIP	SHAFT DIAMETER	SHAFT LENGTH	HAND PIECE	QUANTITY
LCSC5	Curved Shears	5mm	36cm	HP054	6
CS14C	Curved Shears	5mm	14cm	HP054	6
CS23C	Curved Shears	5mm	23cm	HP054	6

ETHICON Energy HARMONIC®

All ENSEAL® and HARMONIC® devices are compatible with the Ethicon Endo-Surgery Generator G11 (code: GEN 11).

BLADES

HARMONIC SYNERGY®

SNGCB

CODE	TIP	SHAFT DIAMETER	SHAFT LENGTH	HAND PIECE	QUANTITY
SNGCB	Curved	3cm	4–9cm	HPBLUE	6
SNGHK	Hook	3cm	4–9cm	HPBLUE	6
SNGHK2	Hook	3cm	4–9cm	HPBLUE	6

HARMONIC® Combination Hook Blade

CODE	TIP	SHAFT DIAMETER	SHAFT LENGTH	HAND PIECE	QUANTITY
HK105	Hook	5mm	10cm	HPO54	6
DH105	Hook	5mm	10cm	HOO54	6

HARMONIC® Laparoscopic Blades

HDHO5

CODE	TIP	SHAFT DIAMETER	SHAFT LENGTH	HAND PIECE	QUANTITY
HDHO5	Hook	5mm	32cm	HPO54	6

ENERGY

ETHICON Energy GENERATOR & Accessories

CAPITAL

EES Generator

CODE	DESCRIPTION	QUANTITY
GEN11	EES Generator compatible with all HARMONIC® and ENSAL® DEVICE	1

Generator Cart

CODE	DESCRIPTION	QUANTITY
CRT11	Generator Cart	1

Foot Switch and Cable

CODE	DESCRIPTION	QUANTITY
FSW11	Generator Foot Switch	1

Connector

HGA11

EGA11

CODE	DESCRIPTION	QUANTITY
HGA11	HARMONIC® Connector – EES Generator and current HARMONIC® Hand Pieces (HP054 & HPBLUE)	1
EGA11	ENSESL® Connector – EES Generator and current ENSEAL® Disposable Instruments	1

ETHICON Energy GENERATOR & Accessories

Hand Pieces

HP054

HPBLUE

CODE	DESCRIPTION	QUANTITY
HP054	HARMONIC® Hand Piece	1
HPBLUE	HARMONIC® BLUE Hand Piece	1

ACCESSORIES

Accessories

CODE	DESCRIPTION	QUANTITY
HST01	Sterilization Tray	1
HST02	Test Tip for HP054	1
TLB01	Torque Lock Blade Wrench	2
TTBLUE	Test Tip for HPBLUE	1
HSA06	5mm Blade System Adaptor	2
HSA08	Disposable Hand Switch Adaptor	3
GEN11VK	HARMONIC® GEN11 Verification Key	1
HP54CTA	HARMONIC® Hand Piece Clean Tool	1

ETHICON Energy POWERSTAR® Bipolar Scissors

Bipolar Scissors for open surgery

PowerStar® scissors are multifunctional, for precise cutting, dissecting and achieving better hemostasis with one instrument.

This leads to fewer instrument changes, thus reducing operating time and allowing an uninterrupted focus on the surgical site.

The safety of bipolar technology minimises undesired collateral tissue damage, as the current only passes through the tissue between the blades.

Because of the short bipolar current pathway, PowerStar® may be a safer alternative to monopolar surgery in patients with pacemakers or implants and may reduce ECG interferences.

The two blades of the scissors are insulated from one another. This is achieved by applying a ceramic coat to one surface of the scissor blade and clear surface hardening to the other. An insulated screw is inserted and the handles are coated.

PowerStar® scissors are available in various lengths and designs to best suit your requirements. Cables with different connectors can be obtained to ensure compatibility with most electrosurgery generators.

POWERSTAR® Bipolar Scissors

CODE	DESCRIPTION	
BP 100	PowerStar Tenotomy 115 mm (4 1/2') curved	
BP120	Power Star Tenotomy 175 mm curved	
BP310	Power Star Metzenbaum Fine 140 mm curved	
BP320	PowerStar Metzenbaum Fine 175 mm (7') curved	
BP340	PowerStar Metzenbaum Fine 230 mm (9') curved	
BP360	PowerStar Metzenbaum Fine 280 mm (11') curved	
BP520	PowerStar Metzenbaum 175 mm (7') curved	
BP540	PowerStar Metzenbaum 230 mm (9') curved	
BP560	PowerStar Metzenbaum 280 mm (11') curved	
BP720	PowerStar Mayo 170 mm (6 3/4') curved	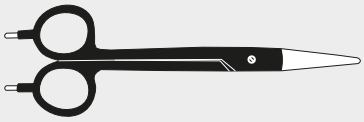

POWERSTAR® Cables

CODE	GENERATOR	OTHER INFORMATION
BP910	Martin, Berchtold, Wolf, Aesculap	5 m
BP930	Erbe, Storz	5 m
BP940	Pegasys, Valleylab	5 m, fixed "banana"

ETHICON Energy ENDOPATH®

ENDOPATH® Laparoscopic Bipolar Forceps

EBF01

EBF02

CODE	JAW	DIAMETER	QUANTITY
EBF01	Macro	5mm	5
EBF02	Micro	5mm	5

ENDOPATH® PROBE PLUS® II Handles

EPH01

EPH02

EPH03

EPH04

CODE	CONTROL	GRIP	QUANTITY
EPH01	Foot	Pistol	6
EPH02	Hand	Pistol	6
EPH03	Foot	Pencil	6
EPH04	Hand	Pencil	6

ETHICON Energy ENDOPATH®

ENDOPATH® PROBE PLUS® II Hollow Tip Electrodes

CODE	ELECTRODE	SHAFT DIAMETER	SHAFT LENGTH	QUANTITY
EPS01	Hook	5mm	34cm	6
EPS02	Right Angle	5mm	34cm	6
EPS03	Right Angle	5mm	34cm	6
EPS04	Curved Dissector	5mm	34cm	6
EPS06	Spatula	5mm	29cm	6
EPS07	Right Angle	5mm	29cm	6

Endopath® PROBE PLUS® II Irrigation

CODE	SUCTION	SHAFT DIAMETER	SHAFT LENGTH	QUANTITY
EPS11	Open End	10mm	34cm	6

ETHICON Energy ENDOPATH®

5mm Endopath® PROBE PLUS® II Canulas

CODE	TYPE	SHAFT DIAMETER	SHAFT LENGTH	QUANTITY
EPS13	Flexible Fiber	5mm	29cm	6

Endopath® Active Cords

EBC02

CODE	Description	PINS	QUANTITY
EBC02	Reusable Coaxial Pin Connector Bipolar Cord	1	1
EBC05	Active Return Cord Fixed Pin Connector	2	1

ETHICON

PART OF THE Johnson & Johnson FAMILY OF COMPANIES

INDEX

Index

CODE	PAGE
10AG	49
10BB	49
2B12LT	11
2B5LT	9
2B5ST	9
2B5XT	9
2CB12LT	13
2CB5LT	13
2CB5ST	13
2D12LT	12
2D12XT	12
2D5LT	11
2D5ST	11
2H12LP	14
5BB	49
5DCD	49
5DCS	49
5DSG	49
6R45B	23
79994	56
79995	56
AC105	44
AC107	44
AC207	44
AC210	44
AC307	44
AC310	44
AC410	44
ACE14S	65
ACE23E	65
ACE36E	65
ACE45E	65
AP200	45
AP201	45
AP2010S	44
AP300	45

CODE	PAGE
AP301	45
AP3010S	44
AP306	45
AP400	45
AP401	45
AP4010S	44
ATB35	24
ATS45	23
ATS45NK	23
ATW35	24
B11LP	10
B11LPH	10
B11LT	10
B11LTH	10
B12LP	10
B12LPH	11
B12LT	10
B12LTH	11
B12SRT	10
B12XT	10
B15LT	11
B5LP	9
B5LPH	9
B5LT	9
B5SP	9
B5ST	9
B5XT	9
B8LT	10
BCD10	50
BD3XV	54
BP100	71
BP120	71
BP310	71
BP320	71
BP340	71
BP360	71

CODE	PAGE
BP520	71
BP540	71
BP560	71
BP720	71
BP910	71
BP930	71
BP940	71
BTD05	49
CB11LT	13
CB12LT	14
CB5LT	13
CB5ST	13
CDH21A	28
CDH25A	28
CDH29A	28
CDH33A	28
CR40B	35
CR40G	35
CRT11	68
CS14C	66
CS23C	66
CS40B	35
CS40G	35
CSS	29
CTS45	23
D11LT	12
D12LT	12
D12XT	12
D5LT	12
D5ST	12
DH105	67
E705R	51
E705RL	51
EBC02	74
EBC05	74
EBF01	72

CODE	PAGE
EBF02	72
EC45	21
EC45A	21
EC45AL	21
EC60	22
EC60A	22
ECR45B	21
ECR45D	21
ECR45G	21
ECR45M	21
ECR45W	21
ECR60B	22
ECR60D	22
ECR60G	22
ECR60M	22
ECR60T	22
ECR60W	22
ECS21A	28
ECS25A	28
ECS29A	28
ECS33A	28
EGA11	68
EH40	29
EJ10C	51
EJ11	51
EL5ML	40
EMS	40
EPH01	72
EPH02	72
EPH03	72
EPH04	72
EPS01	73
EPS02	73
EPS03	73
EPS04	73
EPS06	73

Index

CODE	PAGE
EPS07	73
EPS11	73
EPS13	74
ER320	40
ER420	40
ETRIO325H	63
ETRIO335H	63
ETRIO345H	63
EZ11	51
FCS9	66
FCS17	66
FLR01	16
FLR02	16
FLR03	16
FP007	15
FP015	15
FP020	15
FPK02	15
FSW11	68
GCT-180	55
GCT-360	55
GEN11	68
GEN11VK	69
GOLD1	55
H12LP	14
HAP02	16
HAR23	65
HAR36	65
HAR9F	66
HARH23	65
HARH36	65
HARH45	65
HDHO5	67
HGA11	68
HK105	67
HP054	69

CODE	PAGE
HP54CTA	69
HPBLUE	69
HSA06	69
HSA08	69
HST01	69
HST02	69
LC2010Z	41
LC3010Z	41
LC307	42
LC310	42
LC320	42
LC330	42
LC4010Z	41
LC407	42
LC410	42
LC420	42
LC430	42
LC800	43
LCSC5	66
LGB12	54
LONG45A	23
LONG60	22
LONG60A	22
LT100	43
LT102	43
LT200	43
LT202	43
LT300	43
LT400	43
LX105	41
LX107	41
LX110	41
LX130	41
LX205	42
LX207	42
LX210	42

CODE	PAGE
LX220	42
LX230	42
MCL20	41
MCM20	41
MCM30	41
MCS20	41
MIC108G	51
MIC109G	51
MIC110G	51
MIC113G	51
MIC4030	50
MIC4032	50
MIC4034	50
MIC4036	50
MIC52E	51
MIC54E	51
MIC55E	51
MSM20	41
NSEAL525RH	63
NSEAL535RH	63
NSEAL545RH	63
NSEALX22L	63
NSLG2C14	62
NSLG2C25	62
NSLG2C35	62
NSLG2C35A	62
NSLG2C45	62
NSLG2S14	62
NSLG2S25	62
NSLG2S35	62
NSLG2S35A	62
NSLG2S45	62
NTLC55	27
NTLC75	27
PCE45A	21
PCE60A	22

CODE	PAGE
PLE45A	21
PLE60A	22
PMR35	34
PMW35	34
PN120	14
PN150	14
POUCH	48
PPH01	29
PPH03	29
PRR35	34
PRW35	34
PSE45A	21
PSE60A	22
PSX	34
PT2XV	55
PXR35	34
PXW35	34
SC45	21
SC45A	21
SC60	22
SC60A	22
SDH21A	28
SDH25A	28
SDH29A	28
SDH33A	28
SNGCB	67
SNGHK	67
SNGHK2	67
SR55	27
SR75	27
SRNH1	51
SRNH1L	51
SW100	50
SW110	51
SW120	51
SW122	51

Index

CODE	PAGE
t2B12XT	11
TCD75	26
TCR10	26
TCR55	25
TCR75	26
TCT10	26
TCT55	25
TCT75	26
TL30	32
TL60	32
TL90	32
TLB01	69
TLC10	26
TLC55	25
TLC75	26
TLH30	33
TLH60	33
TLH90	33
TLV30	33
TR30	32
TR35B	24
TR35W	24
TR45G	23
TR45W	23
TR60	32
TR90	32
TRD75	26
TRH30	33
TRH60	33
TRH90	33
TRT10	26
TRT55	25
TRT75	26
TRV30	33
TSB35	24
TSW35	24

CODE	PAGE
TT012	15
TTBLUE	69
TVC55	25
TVR55	25
TX30B	30
TX30G	30
TX30V	30
TX60B	31
TX60G	31
UV120	15
WAVE18S	66
XR30B	30
XR30G	30
XR30V	30
XR60B	31
XR60G	31

Notes

ETHICON

PART OF THE Johnson & Johnson FAMILY OF COMPANIES

Sweden
Johnson & Johnson AB
Staffans väg 2
19 1 84 Sollentuna, Sverige
tfn: +46 8 626 22 00

Norway
Johnson & Johnson MD&D
A division of Janssen-Cilag AS
Drammensveien 288
0283 Oslo, Norge
tlf: +47 66 98 10 30

Denmark
Johnson & Johnson MD&D
A division of Janssen-Cilag A/S
Bregnerødvej 133
3460 Birkerød, Danmark
tlf: +45 45 94 82 00

Finland
Johnson & Johnson Finland
Vaisalantie 2
02130 Espoo, Suomi
puh: +358 20 753 1500

www.ethicon.com

BR PCNORDIC, Version 1 ©, Ethicon Endo-Surgery
All rights reserved. These materials may not be duplicated, copied, or further distributed without specific written permission from Ethicon Endo-Surgery, Nordics.